GAS/ELECTRIC RANGE

for residential use only

verona

Models: VEFSGE304P..

C US

INSTALLATION INSTRUCTIONS
IMPORTANT - PLEASE READ AND FOLLOW

- Before beginning, please read these instructions completely and carefully.
- Do not remove permanently affixed labels, warnings, or plates from the product. This may void the warranty.
- Please observe all local and national codes and ordinances.
- Please ensure that this product is properly grounded.
- **The installer should leave these instructions with the consumer who should retain for local inspector's use and for future reference.**

Installation must conform with local codes or in the absence of codes, the National Fuel Gas Code ANSIZ223.1 - latest edition. Electrical installation must be in accordance with the National Electrical Code, ANSI/NFPA70 - latest edition and/or local codes.
IN CANADA: Installation must be in accordance with the current CAN/CGA-B149.1 National Gas Installation Code or CAN/CGA-B149.2, Propane Installation Code and/or local codes. Electrical installation must be in accordance with the current CSA C22.1 Canadian Electrical Codes Part 1 and/or local codes.

INSTALLATION IN MANUFACTURED (MOBILE) HOME: The installation must conform with the Manufactured Home Construction and Safety Standard, Title 24 CFR, Part 3280 [formerly the Federal Standard for Mobile Home Construction and Safety, Title 24, HUD (Part 280)] or, when such standard is not applicable, the Standard for Manufactured Home Installations, ANSI/NCSBCS A225.1, or with local codes where applicable.

INSTALLATION IN RECREATIONAL PARK TRAILERS: The installation must conform with state or other codes or, in the absence of such codes, with the Standard for Recreational Park Trailers, ANSI A119.5.

Installation of any gas-fired equipment should be made by a licensed plumber. A manual shut-off valve must be installed in an accessible location in the gas line external to the appliance for the purpose of turning on or shutting off gas to the appliance (In Massachusetts such shutoff devices should be approved by the Board of State Examiners of Plumbers & Gas Fitters).

If an external electrical source is utilized, the appliance, when installed, must be electrically grounded in accordance with local codes or, in the absence of local codes, with the national Electrical Code, ANSI/NFPA 70.

Some models are supplied with a protective film on steel and aluminium parts. This film must be removed before installing/using the appliance.

FOR INSTALLER ONLY

THIS RANGE IS FOR RESIDENTIAL USE ONLY

WARNING !

To reduce the risk of tipping the appliance, the appliance must be secured by properly installed anti-tip device packed with the appliance.

- **ALL RANGES CAN TIP**
- **INJURY TO PERSONS COULD RESULT**
- **INSTALL ANTI-TIP DEVICE PACKED WITH RANGE**
- **SEE INSTALLATION INSTRUCTIONS**

WARNING !

If the information in this manual is not followed exactly, a fire or explosion may result causing property damage, personal injury, or death.

– **Do not store or use gasoline or other flammable vapors and liquids in the vicinity of this or any other appliance.**

– **NEVER use this appliance as a space heater to heat or warm the room. Doing so may result in carbon monoxide poisoning and overheating of the appliance.**

– **WHAT TO DO IF YOU SMELL GAS:**

- **Do not try to light any appliance.**
- **Do not touch any electrical switch.**
- **Do not use any phone in your building.**
- **Immediately call your gas supplier from a neighbor's phone. Follow the gas supplier's instructions.**
- **If you cannot reach your gas supplier, call the fire department.**

– **Installation and service must be performed by a qualified installer, service agency, or the gas supplier.**

DATA PLATE

CONVERSION LABEL

This appliance is designed and manufactured solely for the cooking of domestic (household) food and in not suitable for any none domestic application and therefore should not be used in a commercial environmement.
The appliance warranty will be void if the appliance is used within a none domestic environmement i.e. a semi commercial, commercial or communal environment.

INSTALLATION INSTRUCTIONS

WARNING!

THIS APPLIANCE MUST BE INSTALLED BY A QUALIFIED INSTALLER.
Improper installation, adjustment, alteration, services, or maintenance can cause injury or property damage. Consult a qualified installer, service agent, or the gas supplier.

⚠ WARNING!! **IMPORTANT: The use of suitable protective clothing/gloves is recommended when handling, installing of this appliance.**

TOOLS NEEDED FOR INSTALLATION (NOT SUPPLIED WITH THE APPLIANCE)

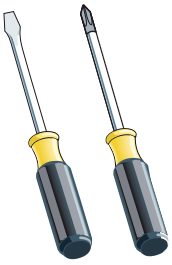 Screwdriver	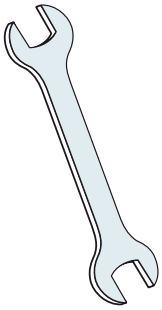 2 - Wrench	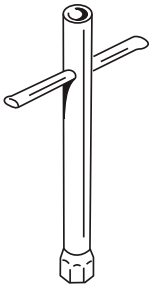 T-handle wrench	Pencil	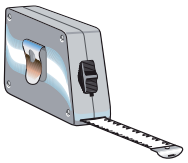 Tape measure
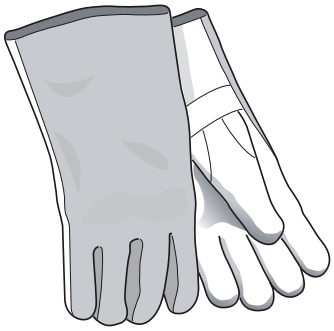 Suitable protective gloves	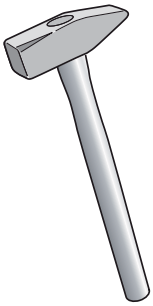 Hammer	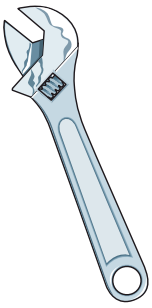 Adjustable wrench	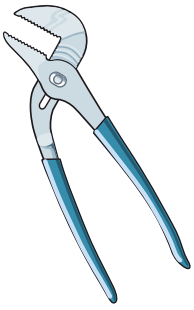 Adjustable pliers	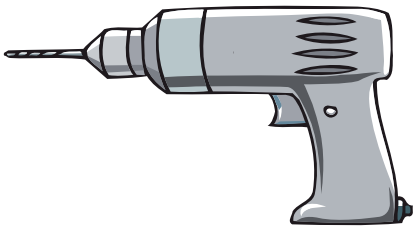 Drill

GENERAL INFORMATION

1. Installation must conform with local codes or, in the absence of local codes, with the **National Fuel Gas Code**, ANSI Z223.1-Latest Edition, CAN/CGA-B149.1 or CAN/CGA-B149.2.

2. Installation in manufactured (mobile) home: installation must conform with the **Manufactured Home Construction and Safety Standard, Title 24 CFR, Part 3280 [formerly the Federal Standard for Mobile Home Construction and Safety, Title 24, HUD (Part 280)]** or, when such standard is not applicable, the Standard for **Manufactured Home Installations, ANSI/NCSBCS A225.1**, or with local codes where applicable.

3. Installation in Recreational Park Trailers: installation must conform with state or other codes or, in the absence of such codes, with the Standard for **Recreational Park Trailers, ANSI A119.5.**

4. **WARNING!!**
   This appliance shall not be used for space heating. This information is based on safety considerations.

5. All openings in the wall behind the appliance and in the floor under the appliance shall be sealed.

6. Keep appliance area clear and free from combustible materials, gasoline, and other flammable vapors.

7. Do not obstruct the flow of combustion and ventilation air.

8. Disconnect the electrical supply to the appliance before servicing.

9. When removing appliance for cleaning and/or service;
   A. Shut off gas at main supply.
   B. Disconnect AC power supply.
   C. Disconnect gas line to the inlet pipe.
   D. Carefully remove the range by pulling outward.
   CAUTION: Range is heavy; use care in handling.

10. **Electrical Requirement**
    Electrical installation should comply with national and local codes.

11. **Air Supply and Ventilation**
    The installer must refers to local/national codes.

12. **Gas Manifold Pressure**
    Natural gas - 4.0” W.C.P.
    LP/Propane - 11.0” W.C.P.

13. The misuse of oven door (e.g. stepping, sitting, or leaning on them) can result in potential hazards and/or injuries.

14. When installing or removing the range for service, a rolling lift jack should be used. Do not push against any of the edges of the range in an attempt to slide it into or out of the installation. Pushing or pulling a range (rather than using a lift jack) also increases the possibility of bending the leg spindles or the internal coupling connectors.

WARNING!!

ELECTRICAL GROUNDING INSTRUCTIONS

The range must be electrically grounded in accordance with local codes or, in the absence of local codes, with the National Electrical Code, ANSI/NFPA No. 70-latest edition, in Canada Canadian Electrical Code.

Installation should be made by a licensed electrician.

FOR PERSONAL SAFETY, THIS APPLIANCE MUST BE PROPERLY GROUNDED.

If an external electrical source is utilized, the installation must be electrically grounded in accordance with local codes or, in the absence of local codes, with the national Electrical Code, ANSI/NFPA 70.

REPLACEMENT PARTS

Only authorized replacement parts may be used in performing service on the range. Replacement parts are available from factory authorized parts distributors. Contact the nearest parts distributor in your area.

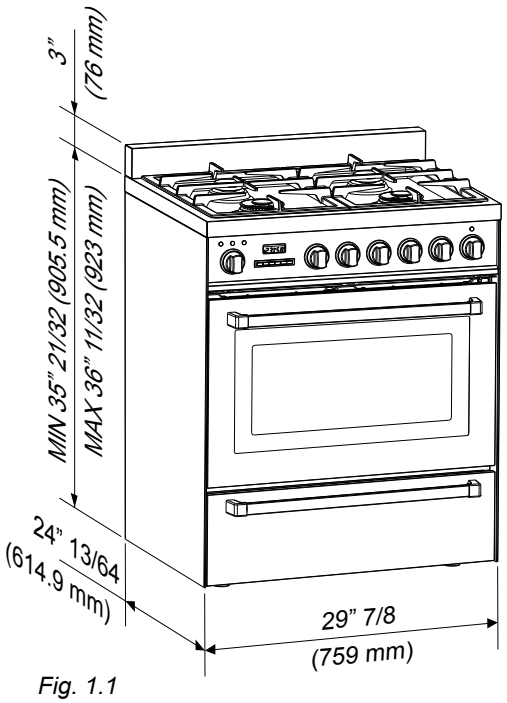

Fig. 1.1

PROXIMITY TO SIDE CABINETS

1. This range may be installed directly adjacent to existing 36" (914 mm) high base cabinets.

   Range dimensions:

   - width: 29" 7/8 (759 mm)
   - depth: 24" 13/64 (614.9 mm)
   - height (without backguard): MIN 35" 21/32 (905.5 mm) - MAX 36" 11/32 (923 mm)
   - backguard (height): 3" (76 mm)

   Gas line opening: Wall - 37/64" (14.5 mm) from the right side to centre of range; from 5" 7/16 (138 mm) to 6" 1/8 (155.5 mm) [depending on feet regulation] from the floor.

   Grounded outlet: should be located 37/64" (14.5 mm) from the left side to centre of range; from 5" 7/16 (138 mm) to 6" 1/8 (155.5 mm) [depending on feet regulation] from the floor.

2. The range CANNOT be installed directly adjacent to sidewalls, tall cabinets, tall appliances, or other side vertical surfaces above 36" (914 mm) high.
   There must be a minimum of 11" 13/16 (300 mm) side clearance from the range to such combustible surfaces TO THE LEFT or TO THE RIGHT above the 36" (914 mm) high countertop.
   IMPORTANT: One side (left or right) above the 36" (914 mm) high countertop must always be kept clear.

   Island installation: There must be a minimum of 12" (305 mm) clearance from the rear of the backguard to such combustible surface on the back of the range above the 36" (914 mm) high countertop.

3. The maximum upper cabinet depth recommended is 13" (330 mm). Wall cabinet above the range must be a minimum of 30" (762 mm) above the countertop for a width of minimum 30" (762 mm): it has to be centered with the range. Side wall cabinets above the range must be a minimum of 18" (457 mm) above the countertop.

GAS AND ELECTRIC CONNECTION

Ref.	inch	mm
A	5” 7/16 - 6” 1/8	138 - 155.5
B	14” 3/8	365
C	37/64”	14.5

(*) : Depending on feet regulation

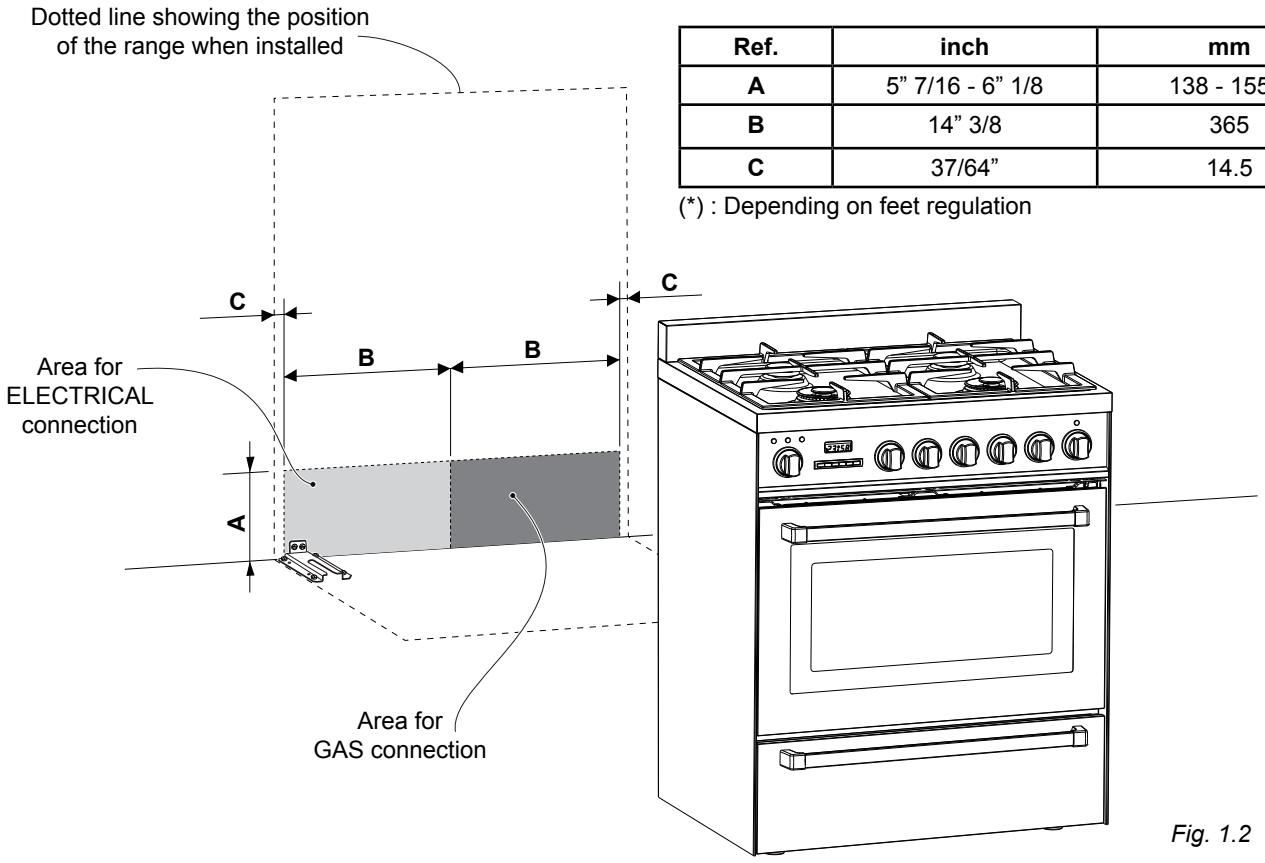

Fig. 1.2

ASSEMBLING THE BACKGUARD
It is mandatory to install the backguard.

Assemble the backguard as shown in figure 1.3:

- Screw the 2 screws “**A**” interposing the spacers.
- Screw the central screw “**B**”.

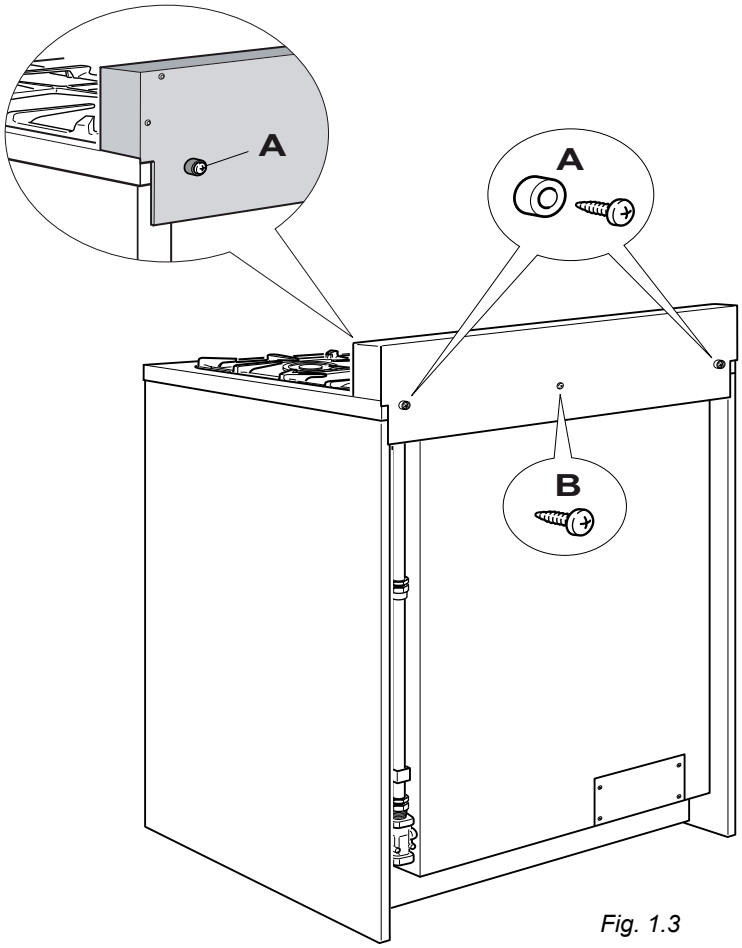

Fig. 1.3

PROXIMITY TO SIDE CABINETS
STANDARD INSTALLATION

Fig. 1.4a

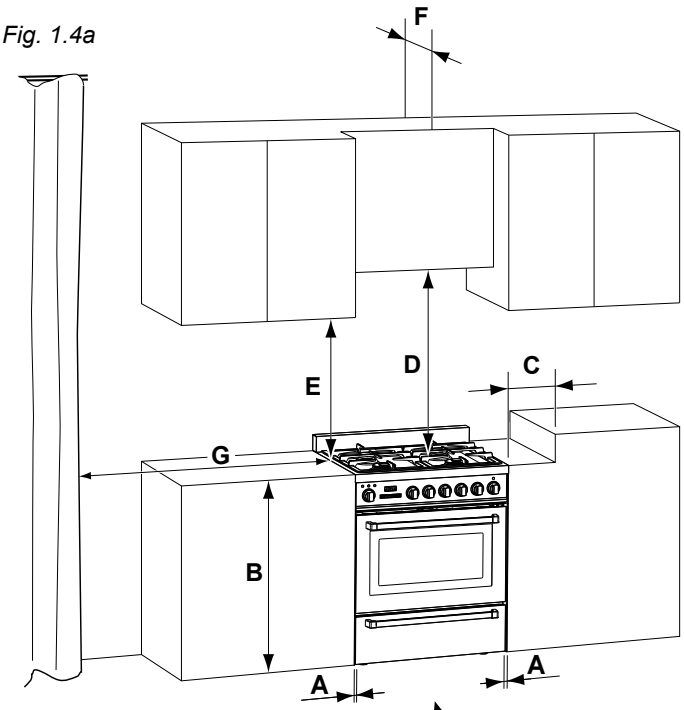

Ref.	inch	mm
A	0”	0
B	36”	914
C	11” 13/16	300
D	30” minimum	762 minimum
E	18” minimum	457 minimum
F	13” maximum	330 maximum
G	20” minimum	500 minimum

Fig. 1.4b

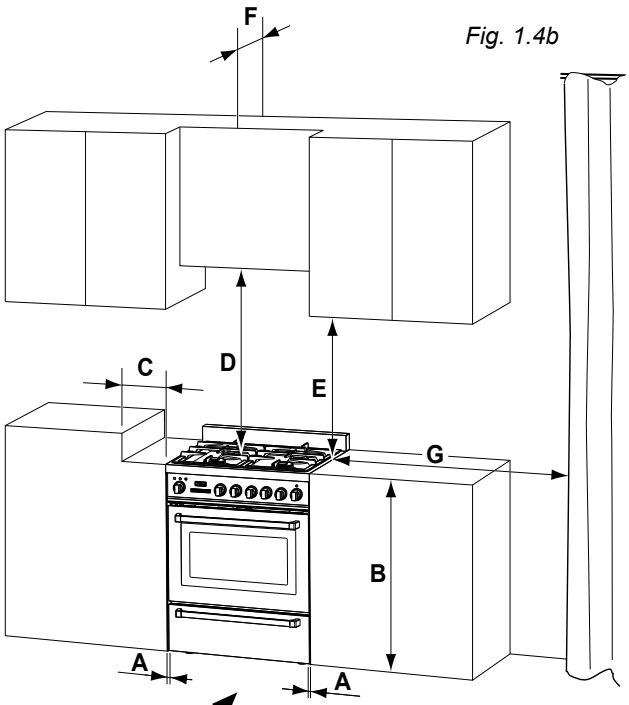

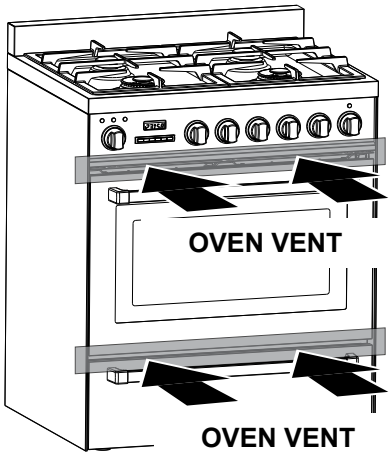

PROXIMITY TO SIDE CABINETS
ISLAND INSTALLATION

Fig. 1.5a

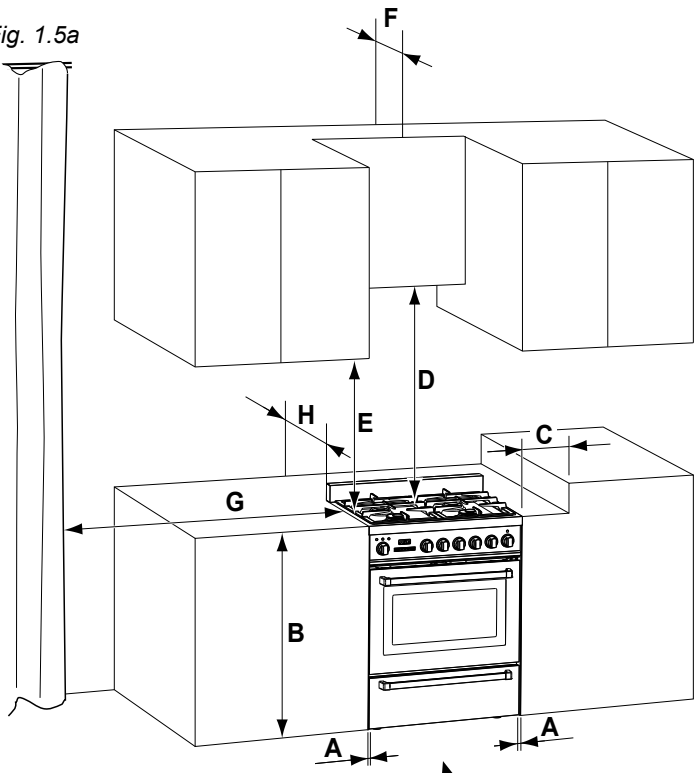

Ref.	inch	mm
A	0”	0
B	36”	914
C	11” 13/16	300
D	30” minimum	762 minimum
E	18” minimum	457 minimum
F	13” maximum	330 maximum
G	20” minimum	500 minimum
H	12” minimum	305 minimum

Fig. 1.5b

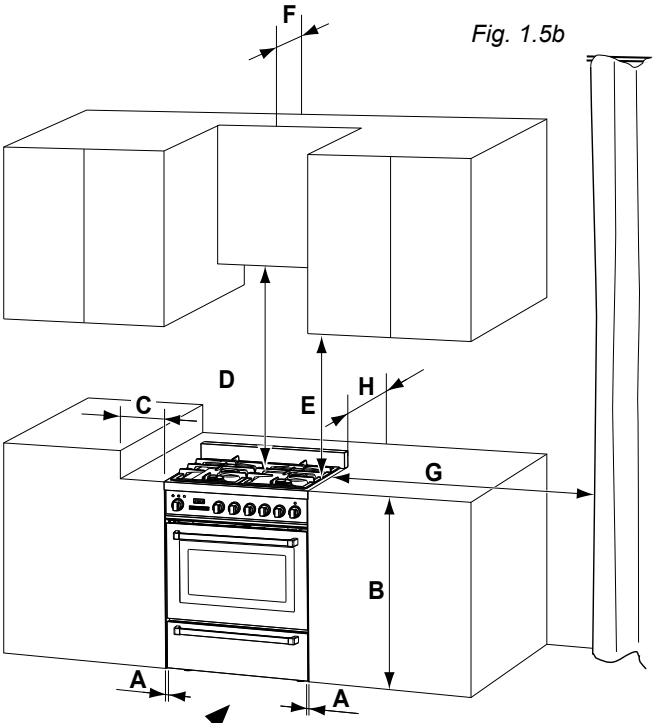

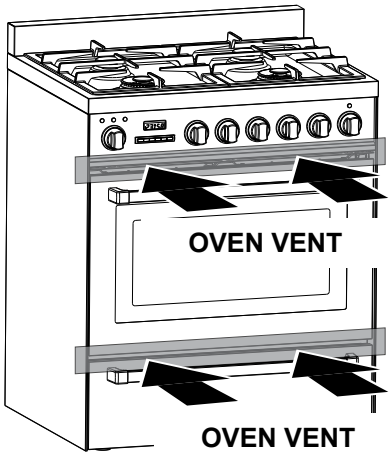

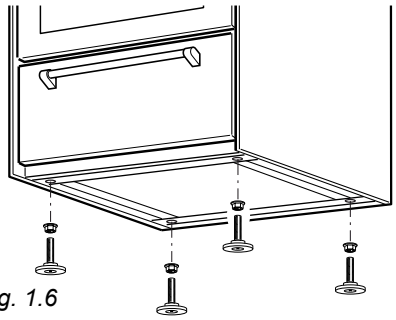

Fig. 1.6

LEVELLING THE RANGE

The range is equipped with 4 LEVELLING FEET and may be levelled by screwing or unscrewing the feet (figs. 1.6 - 1.7).
It is important to observe the directions of figures 1.6, 1.8a, 1.8b.

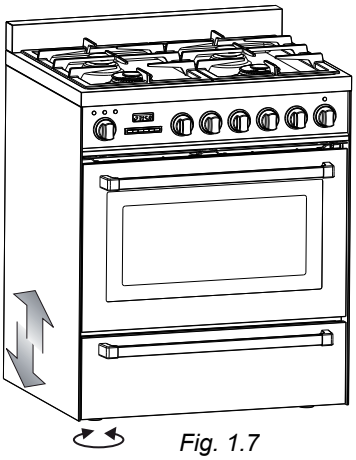

Fig. 1.7

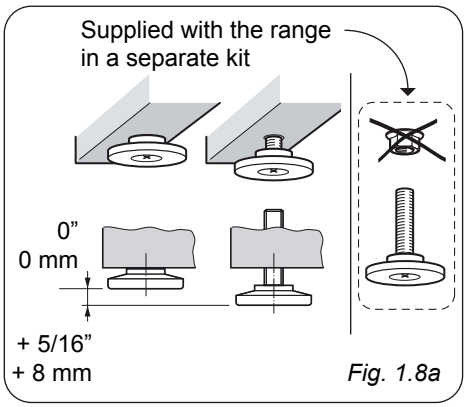

Fig. 1.8a

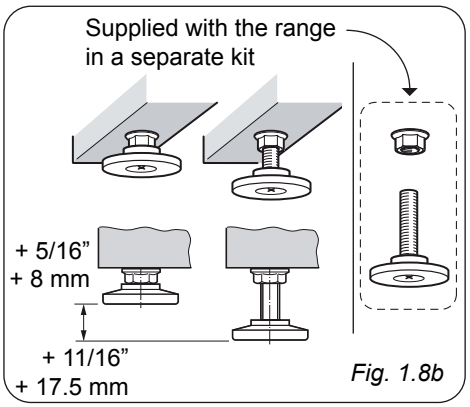

Fig. 1.8b

YOU MUST USE STABILITY ANTI TIP BRACKET TO PREVENT UNIT FROM TIPPING.

ANTI-TIP STABILITY DEVICE INSTALLATION INSTRUCTIONS

1. The anti-tip bracket has to be attached as shown on figure below (only rear left side), it has to be fixed on the floor and on the rear wall by no. 6 (six) suitable screws (not supplied).
2. After fixing the anti-tip bracket, slide range into place. Be sure the rear left foot slides under the anti-tip bracket attached.

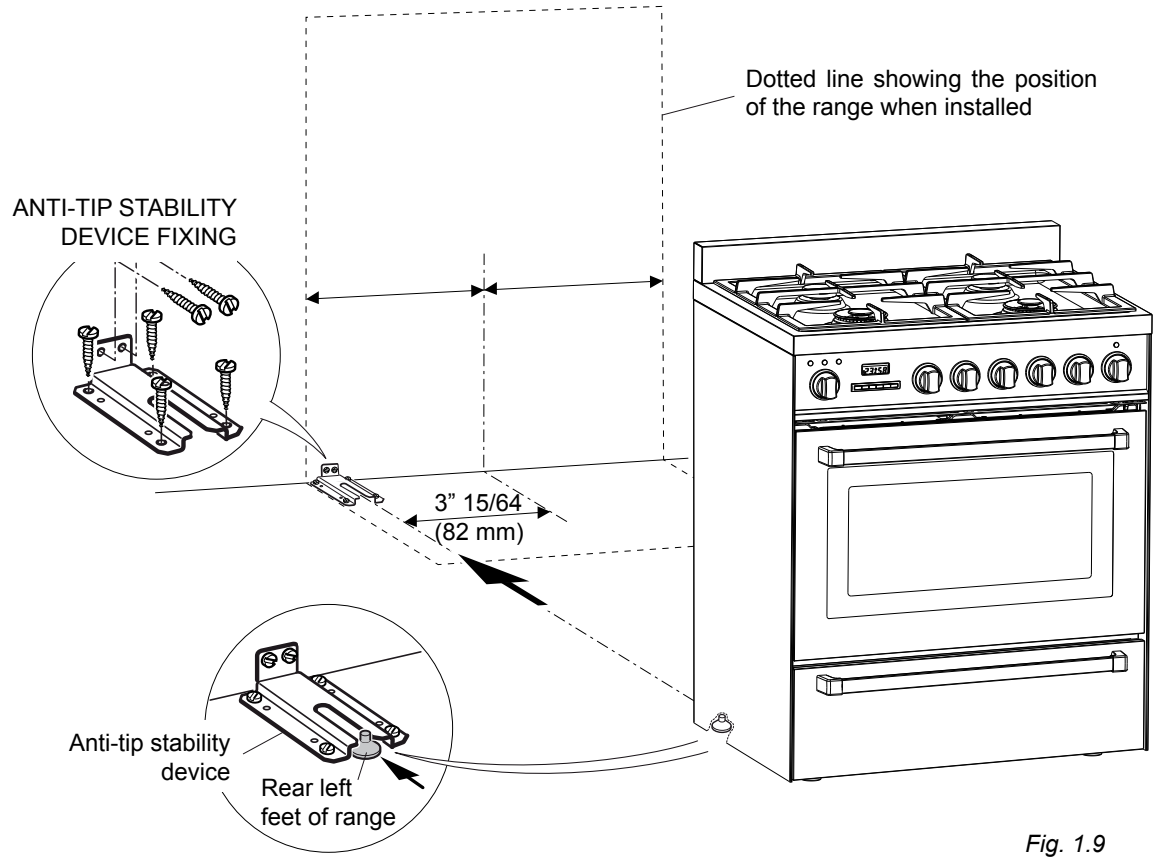

Fig. 1.9

INSTALLING THE COOKTOP FRONT GUARD

To increase the clearance between the front edge of the cooktop and the burners it is possible to install the cooktop front guard supplied with the appliance.

IMPORTANT: To install/remove the guard it is necessary to remove the cooktop.
Attempting to install/remove the guard without disassembling the cooktop will result in permanent damage to the appliance.

Install the front guard as shown in figure 1.10:

1. Remove the backguard.
2. Remove the pan supports and the burner flame spreaders.
3. Unscrew cooktop fixing screws ("**A**" in figure below).
4. Remove the dual burner inner flame spreader ("**B**" in figure below).
5. Remove the cooktop (keep attention not to damage the gaskets fitted above the burner cups - below the cooktop).
6. Install the front guard "**C**" by inserting the wire terminals into the proper holes above the control panel ("**D**" in figure below).
7. Reassemble the cooktop and the other components (steps from 5 to 1).
   Pay special attention to the gaskets fitted above the burner cups (below the cooktop); if they are damaged they shall be replaced.

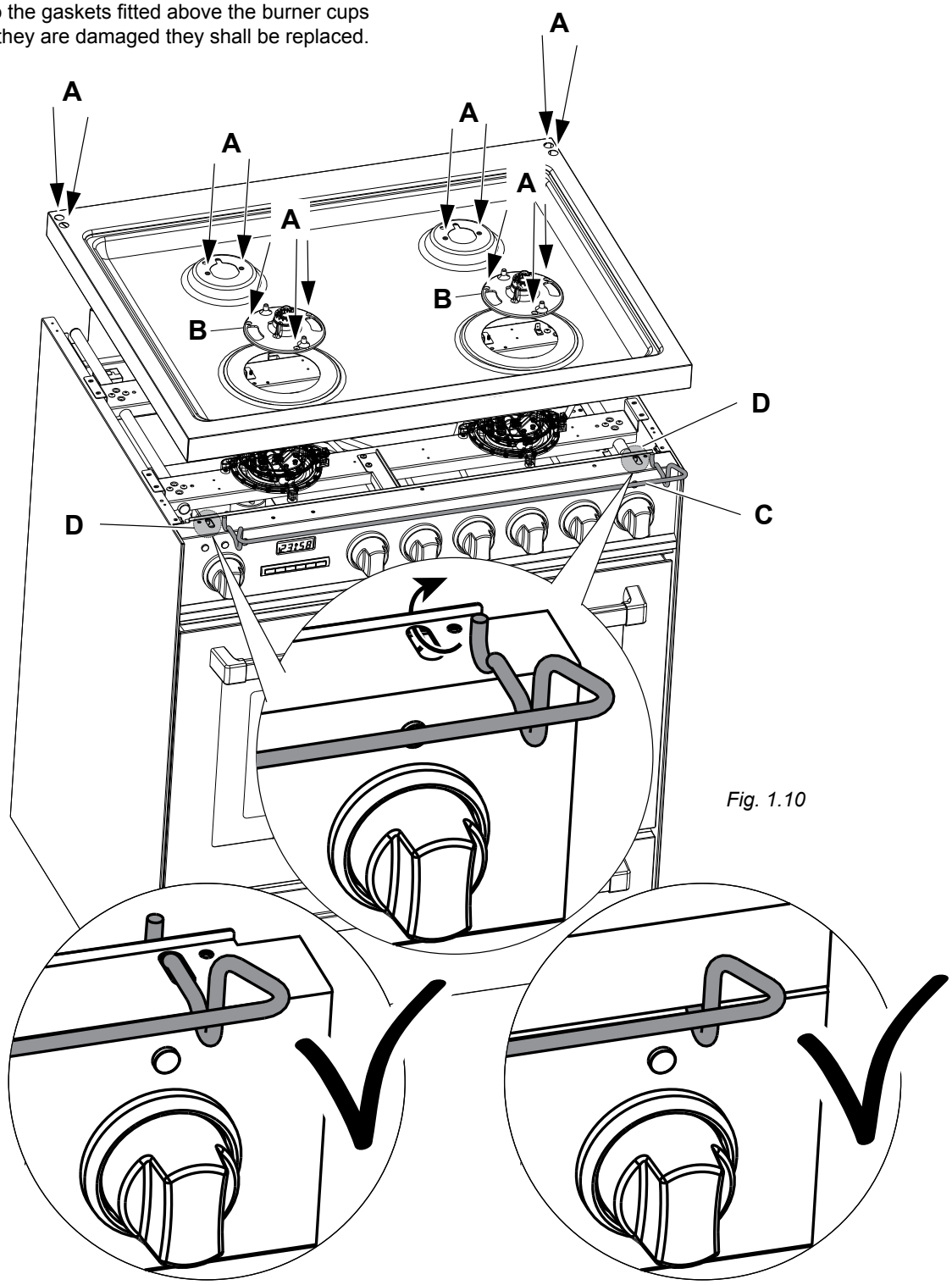

Fig. 1.10

All gas connections must be made according to national and local codes. This gas supply (service) line must be the same size or greater than the inlet line of the appliance. Sealant on all pipe joints must be resistant to the action of LP/Propane gas.

The range is equipped for the use with NATURAL gas. It is design-certified by CSA International for NATURAL and L.P. gases with appropriate conversion.

The model/serial rating plate, located on the back of the appliance, has information on the type of gas that can be used. If this information does not agree with the type of gas available, check with the local gas supplier. See page from 16 to 19 for L.P. gas conversion instructions.

Explosion Hazard

Use a new CSA or UL approved gas supply line.

Install a shut-off valve.

Securely tighten all gas connections.

If connected to LP, have a qualified person make sure gas pressure does not exceed 14" water column.

Examples of a qualified person include licensed heating personnel, authorized gas company personnel, and authorized service personnel.

Failure to do so can result in death, explosion, or fire.

1. Manual Shut-off Valve (fig: 2.1):

A manual shut-off valve must be installed in an accessible location in the gas line external to the appliance for the purpose of turning on or shutting off gas to the appliance (In Massachusetts such shutoff devices should be approved by the Board of State Examiners of Plumbers & Gas Fitters).
This valve should be located in the same room as the range and should be in a location that allows ease of opening and closing (in a position where it can be reached quickly in the event of an emergency).
Do not block access to the shutoff valve. The valve is for turning on or shutting off gas to the appliance.

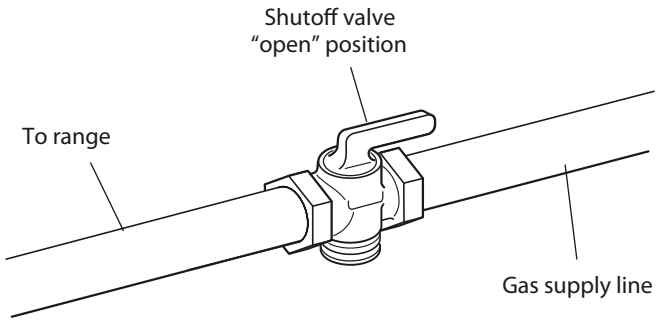

Fig. 2.1

2. Pressure Regulator:

a. All heavy duty, commercial type cooking equipment must have a pressure regulator on the incoming service line for safe and efficient operation, since service pressure may fluctuate with local demand.
Before installing the regulator mount the 1/2" NPT (conical) male connector to the regulator (see picture 2.2).
Gasket supplied has to be placed between 1/2" NPT (conical) connector/extension pipe male pipe fitting (see picture 2.3).
The regulator supplied with this range must be installed before any gas connections are made.
Use supplied pressure regulator only.

PRESSURE REGULATOR INSTALLATION

STEP 1

Mount the 1/2” NPT (conical) male connector to the pressure regulator and tighten by using a wrench.
Do not over tighten the connector.
Over tightening may crack regulator.

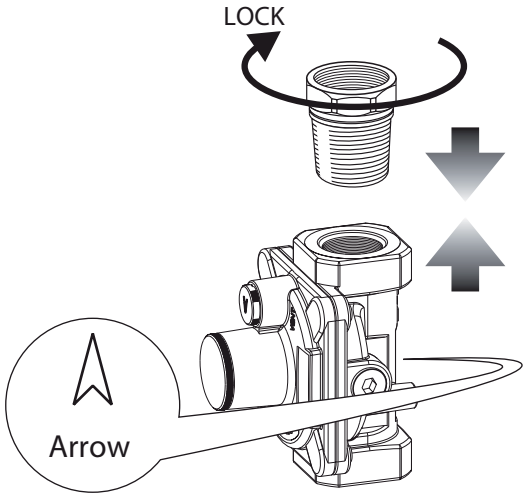

Fig. 2.2

STEP 2

Assemble the 1/2” NPT connector + pressure regulator group to the extension pipe interposing the gasket supplied.
The regulator cover must be oriented toward the front side of the range.
IMPORTANT: use two wrenches to tighten the connection.

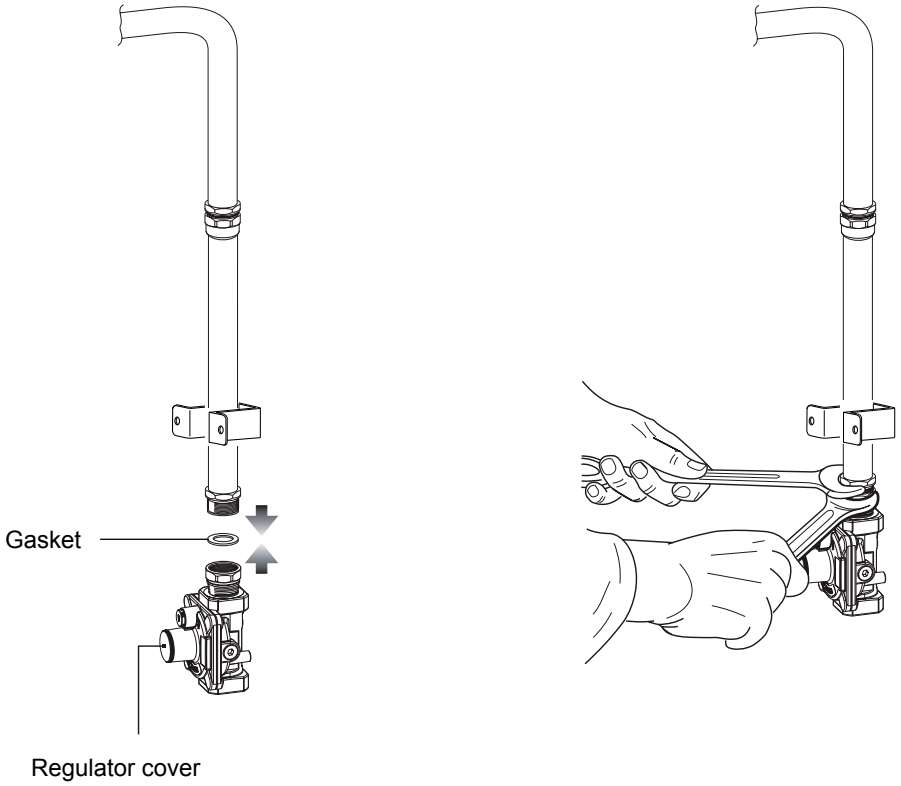

Fig. 2.3

GAS CONNECTION SPEFICICATION

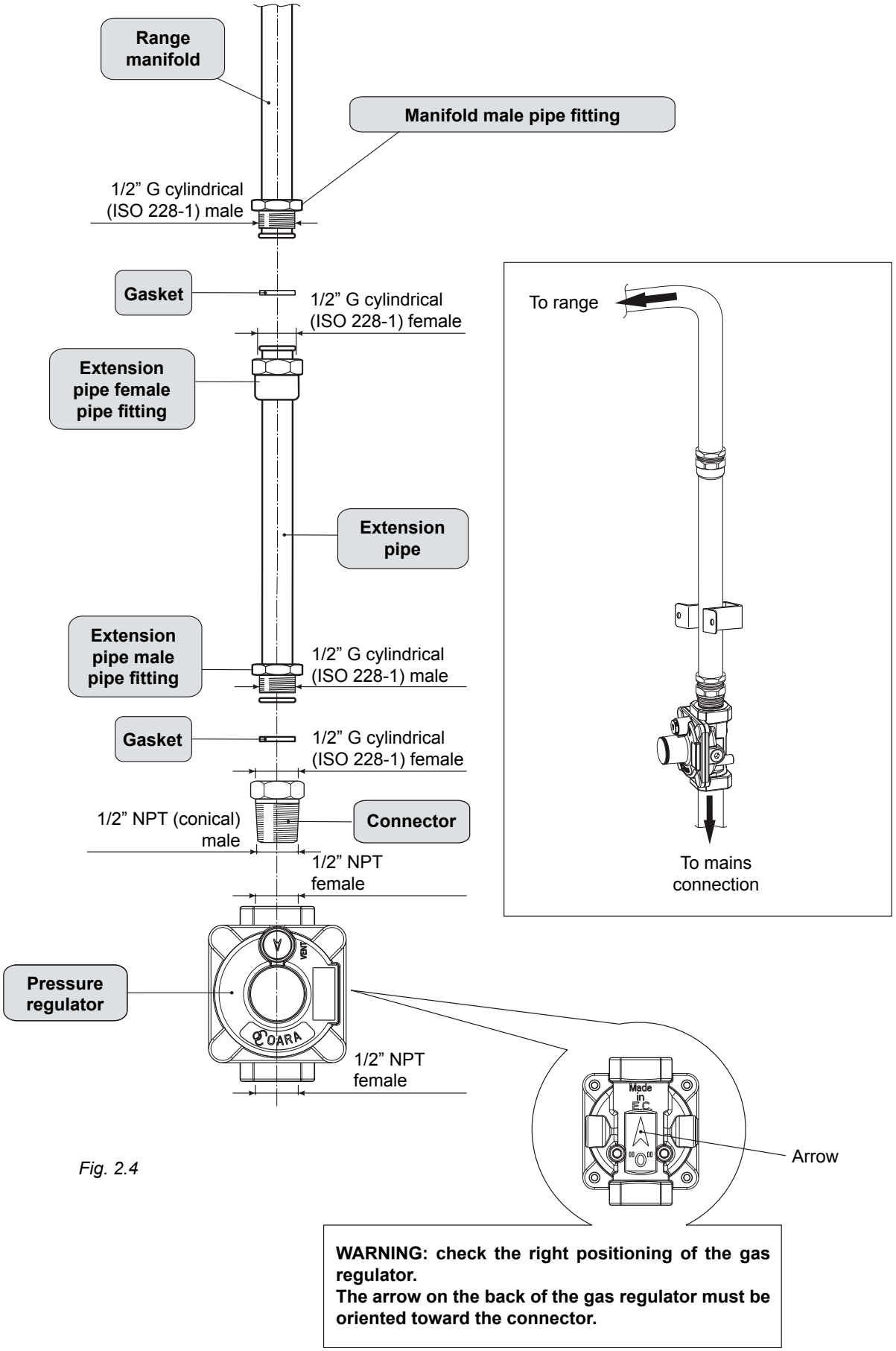

Fig. 2.4

WARNING: check the right positioning of the gas regulator.
The arrow on the back of the gas regulator must be oriented toward the connector.

TEST POINT ADAPTER
The Test Point adapter is available from the After-Sales Service.

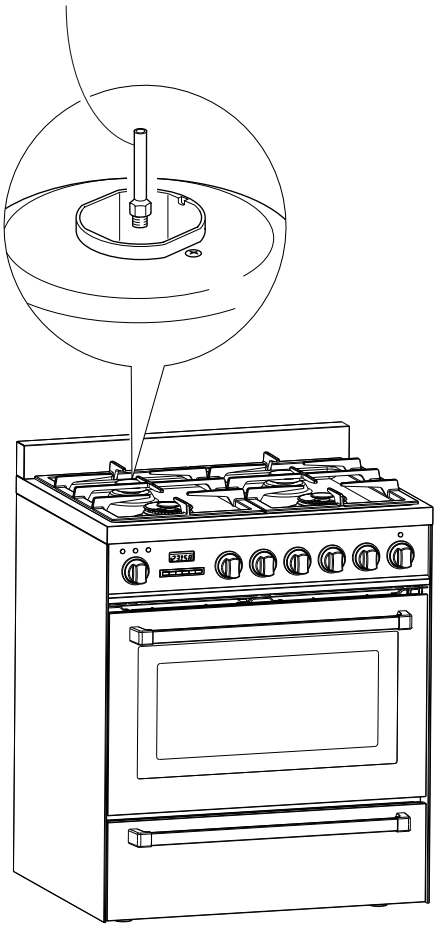

Fig. 2.5

b. Any conversion required must be performed by your dealer or a qualified licensed technician or gas service company. Please provide the service person with this manual before work is started on the range. (Gas conversions are the responsibility of the dealer or end user.)

c. This range can be used with NATURAL or LP/PROPANE gas. It is shipped from the factory adjusted for use with NATURAL gas.

d. Manifold pressure should be checked with a manometer and by operating as below detailed:
   - Remove the injector from the rear left (or rear right) burner and mount the proper test point adapter which is available from the After-Sales Service (see side figure and the “OPERATIONS TO BE PERFORMED WHEN SUBSTITUTING THE INJECTORS” chapter).
   - Turn the rear left (or rear right) burner control knob to the maximum position.
   - Press the knob and keeping it pressed check the manifold pressure with a manometer; NATURAL gas requires 4.0” W.C.P. and LP/PROPANE requires 11.0” W.C.P.
   - Incoming line pressure upstream from the regulator must be 1” W.C.P. higher than the manifold pressure in order to check the regulator.
   - The regulator used on this range can withstand a maximum input pressure of 1/2 PSI (14.0” W.C.P). If the line pressure is in excess of that amount, a stepdown regulator will be required.

e. The appliance, its individual shut-off valve, and pressure regulator must be disconnected from the gas supply piping system during any pressure testing of that system at pressures in excess of 1/2 PSI (3.5 kPa).

f. The appliance must be isolated from the gas supply piping system by closing its individual manual shut-off valve during any pressure testing of the gas supply piping system at test pressure equal to or less than 1/2 PSI (3.5 kPa).

3. Flexible Connections:

If local codes permit, CSA or UL design-certified, flexible metal appliance connector is recommended for connecting this range to the gas supply line. Do Not kink or damage the flexible connector when moving the range. The pressure regulator has 1/2” NPT female pipe threads.You will need to determine the fittings required, depending on the size of your gas supply line, flexible metal connector and shutoff valve.

4. Rigid Pipe Connections:

If rigid pipe is used as a gas supply line, a combination of pipe fittings must be used to obtain an in-line connection to the range. All strains must be removed from the supply and fuel lines so range will be level and in line.

- Use joint compounds and gaskets that are resistant to action of natural or propane gas on all male pipe threads.
- Do not over tighten gas fitting when attaching to pressure regulator. Over tightening may crack regulator.

5. Leak Testing:

IMPORTANT: Leak testing of the appliance shall be conducted as follows:

- After final gas connection is made, turn on manual gas valve and test all connections in gas supply piping and appliance for gas leaks with a soapy water solution. During this test all appliance gas valves have to be closed.
- In order to avoid property damage or serious personal injury, never use a lighted match. If a leak is present, tighten joint or unscrew, apply more joint compound, tighten again and retest connection for leak.

CONVERSION TO LP/PROPANE GAS

Every range is provided with a set of injectors for the various types of gas.
Select the injectors to be replaced according to the “INJECTORS TABLE”.
The nozzle diameters, expressed in hundredths of a millimetre, are marked on the body of each injector.

SETTING THE PRESSURE REGULATOR (fig. 2.6)

The pressure regulator is accessible by removing the warmer drawer; the pressure regulator is positioned on the rear right side of the range (fig. 2.9).
To remove the warming drawer:

1. Open the drawer completely (fig. 2.6)
2. Move down the lever of left guide (fig. 2.7) and up the lever of right guide (fig. 2.8).
3. Remove the drawer; the levers have to be keep moved (fig. 2.6).

Fig. 2.8

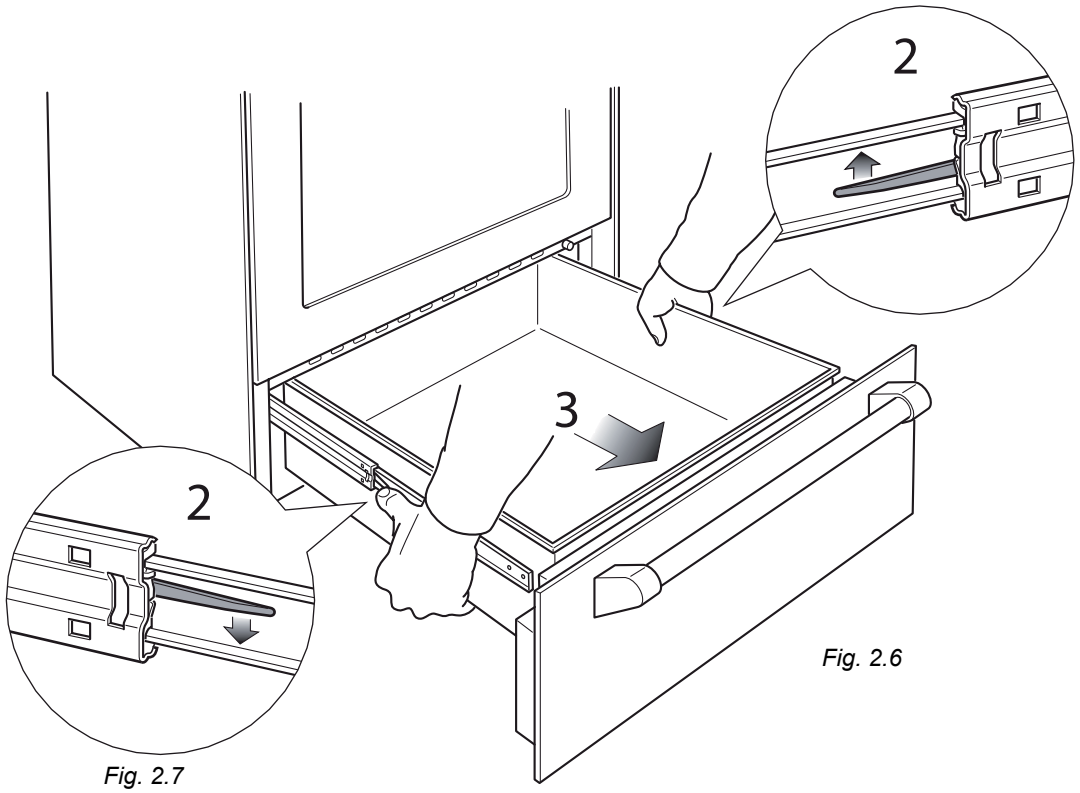

Fig. 2.6

Fig. 2.7

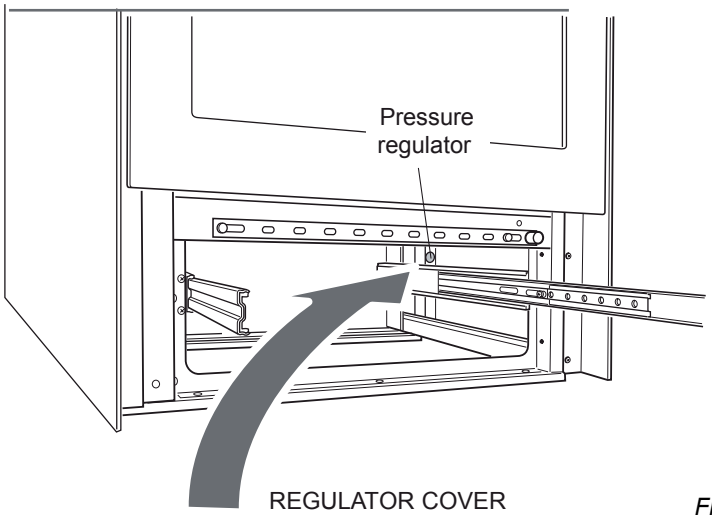

To set the pressure regulator (fig. 2.9):

1. Unscrew the regulator cover.
2. Unscrew the "**A**" component, reverse and screw it according to the LP/PROPANE regulation.

Fig. 2.9

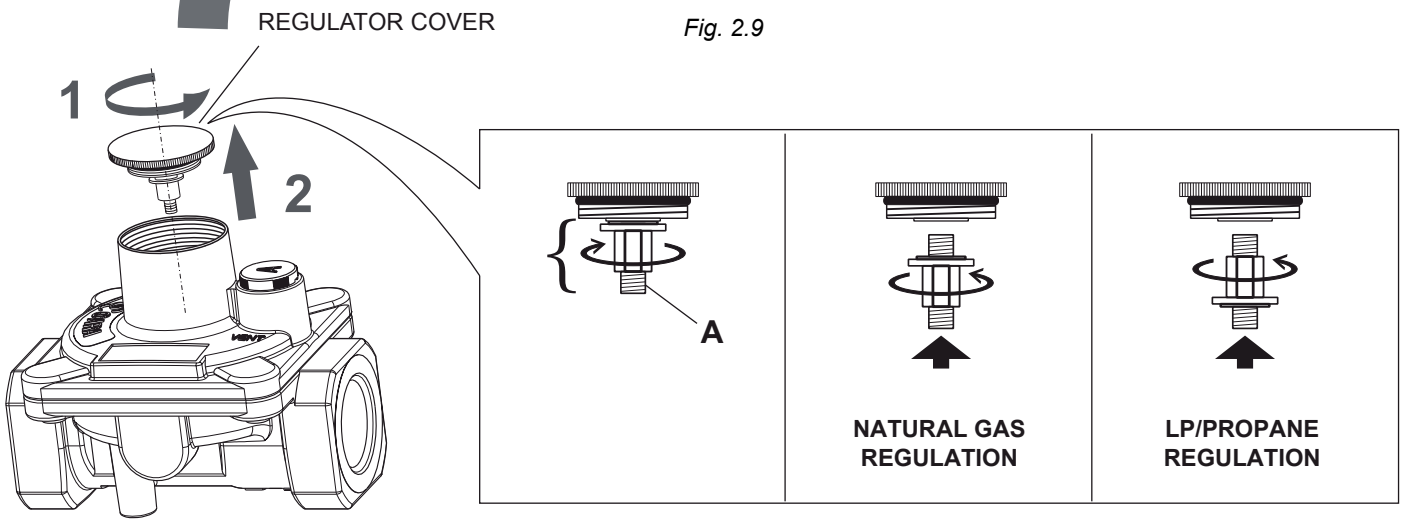

Fitting the warming drawer (fig. 2.10):

1. Insert the drawer guides into the range guides (fig. 2.10).
2. Gently close the drawer completely; the safety catchs will be automatically hooked.

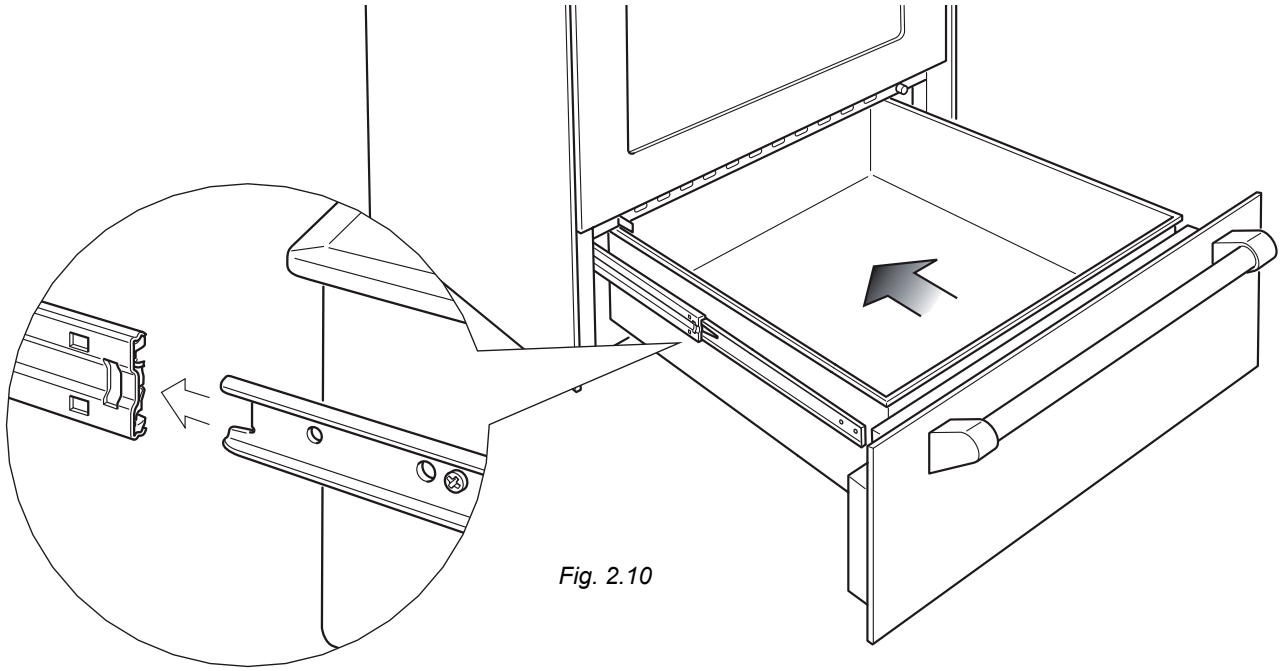

Fig. 2.10

INJECTORS TABLE

		NOMINAL POWER	REDUCED POWER	LP/PROPANE 11" W.C.P.	NATURAL GAS 4" W.C.P.
BURNERS		BTU/hr	BTU/hr	Ø injector [1/100 mm]	Ø injector [1/100 mm]
Semirapid (SR)		8000	1500	85	139
Dual (D)	Inner crown	2100	1000	42 (*)	70 (*)
	Inner & outer crown	17000	6500	115 (#)	200 (#)

(*) inner crown ("J_2" in figure 2.12)

(#) outer crown ("J_3" in figure 2.12)

OPERATIONS TO BE PERFORMED WHEN SUBSTITUTING THE INJECTORS

- Remove the pan supports, the burner caps and the flame spreaders.
- Dual burner only (fig. 2.12): Unscrew the no.3 fixing screws "**A**" and remove the inner crown flame spreader "**B**"; then unscrew the no.2 fixing screws "**C**" and remove the cover plate "**D**".
- Using a wrench substitute the nozzle injectors "J_1", "J_2" and "J_3" (figs. 2.11, 2.12) with those most suitable for the kind of gas for which it is to be used.
- Dual burner only (fig. 2.12): Refit the cover plate "**D**" and screw the no.2 fixing screws "**C**"; then refit the inner crown flame spreader "**B**" and screw the no.3 fixing screws "**A**"
- Refit the flame spreaders, the burner caps and the pan supports.

The burner are conceived in such a way so as not to require the regulation of the primary air.

SEMI-RAPID BURNER

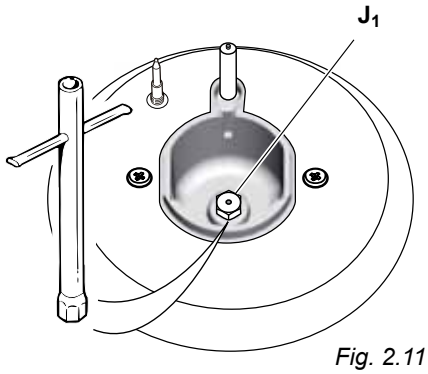

Fig. 2.11

DUAL BURNER

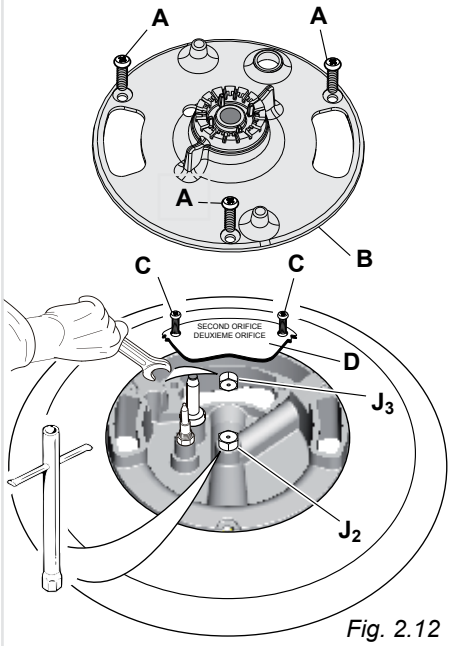

Fig. 2.12

SETTING THE BURNER MINIMUM

When switching from one type of gas to another, the minimum flow rate must also be correct: the flame should not go out even when passing suddenly from maximum to minimum flame.

To regulate the flame (fig. 2.13) follow the instructions below:

Semirapid burner

- Light the burner.
- Set the gas valve to "LO" position (minimum rate).
- Remove the knob.
- With a thin screwdriver, turn the regulation screw "R_1" until adjustment is correct.

Inside crown of DUAL burner

- Light the DUAL burner.
- Set the gas valve to "SIM ◉" position (minimum rate of inner crown).
- Remove the knob
- With a thin screwdriver, turn the regulation screw "R_2" until adjustment is correct.

Outside crown of DUAL burner

- Light the DUAL burner.
- Set the gas valve to "LO ◉" position (minimum rate of inner and outer crowns).
- Remove the knob.
- With a thin screwdriver, turn the regulation screw "R_3" until adjustment is correct.

For LP/PROPANE gas, tighten the adjustment screws completely.

After regulation repeat the operations indicated in paragraph "2. PRESSURE REGULATOR" at page 12.
If the range has been disconnected and then connected again to the gas supply line repeat the operations indicated in paragraph "5. LEAK TESTING" at page 15.

IMPORTANT:
After conversion to LP/PROPANE gas has been carried out affix on the back of the appliance, near the data plate, the conversion label supplied and also affix a conversion label at page 3 of this instruction manual.

R_1 Regulation screw (Semirapid burner)
R_2 Regulation screw (Inner crown of dual burner)
R_3 Regulation screw (Outer crown of dual burner)

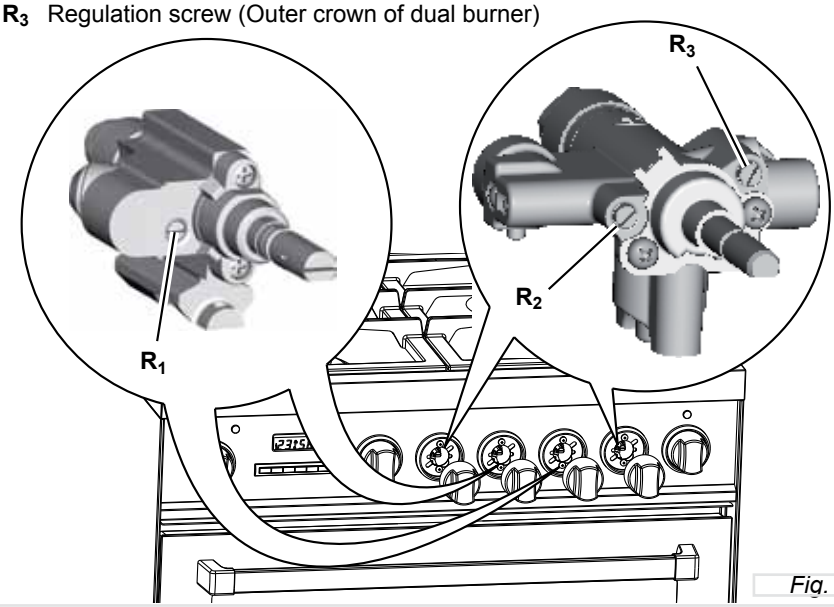

Fig. 2.13

ELECTRICAL REQUIREMENTS

- This appliance must be properly installed and grounded by a qualified technician in accordance with the National Electrical Code ANSI/NFPA No.70 (latest edition) and local electrical code requirements.
- This appliance may be connected by means of permanent “Hard Wiring” or “Power Supply Cord kit”.
- Power supply cord is not supplied, but it is available through your local electric supply house.
- Use only 3-conductor or 4-conductor CSA/UL listed range cord rated at 30 amps with 250V minimum and provided with ring terminals. These cords should be provided with strain relief or conduit connector.

  Warning: Frame grounded through neutral lead. If used in,
  – New branch-circuit installations (1996 NEC),
  – Mobile homes,
  – Recreational vehicles, or
  – In an area where local codes prohibit grounding through neutral, use a 4 conductor cord or conduit.
- The range must be connected to the proper electrical voltage and frequency as specified on the rating plate.
- The range can be connected directly to the fused disconnect (or circuit breaker box) through flexible, counduit with copper or aluminium wiring (with grounding wire). Allow two to three feet of slack in the line so that it can be moved if servicing is ever necessary.

WARNING

TO AVOID ELECTRICAL SHOCK HAZARD, BEFORE INSTALLING THE APPLIANCE, SWITCH POWER OFF AT THE SERVICE PANEL AND LOCK THE PANEL TO PREVENT THE POWER FROM BEING SWITCHED ON ACCIDENTALLY.

ELECTRICAL CONNECTION WITH POWER CORD

Use a 3-wire power supply cord kit rated for 30 amps - 240-208/120 volts with closed loop terminals and marked for use with ranges.
Where local codes do not permit grounding through neutral, use a 4-wire power supply cord.
The CSA/UL listed cord must be secured to the range with a suitable strain relief bracket.
The electrical connection is made at the terminal block, which is located behind the access door on the back of the range.

ELECTRICAL CONNECTION WITH CONDUIT

Use 1/2” (1.3 cm) trade size CSA/UL listed conduit with a conduit clamp, 16 AWG/600 volt copper conductor colored red for line 1 and black for line 2 and 16 AWG/600 volt copper conductor (or 14 AWG/600 volt copper conductor if grounding through neutral) colored white for neutral with closed loop terminals marked for use with ranges.
Where local codes do not permit grounding through neutral, use a green 14 AWG copper conductor as directed in the 4-wire connector directions.
The conduit must be secured to the range with the strain relief bracket.
The electrical connection is made at the terminal block, which is located behind the access door on the back of the range.

3-Wire Power Cord Installation (See Figure 3.2)

1. Remove the **Terminal Block Access Plate** on the back of the range by unscrewing the 4 fixing **Screws** (Figure 3.1).
2. Check the correct positioning of the **Power Cord Bracket** as per figure 3.2.
3. Assemble the strain relief in the hole on **Power Cord Bracket**.
4. Insert the **Power Cord** through the strain relief and tighten.
5. Remove the 3 wire terminal nuts and washers from the **Terminal Block**.
6. Plug the terminal holes of **Power Cord**.
   The **Neutral or Ground Wire** of the **Power Cord** must be connected to the neutral terminal located in the center of **Terminal Block**.
   The **Power Wires** must be connected to the outside terminals.
7. Plug washers and tighten nuts securely.
   ⚠ Do not remove **Ground strap**.
8. Reassemble the **Terminal Block Access Plate** on the back of the range by screwing the 4 fixing **Screws** (Figure 3.1).

Fig. 3.1

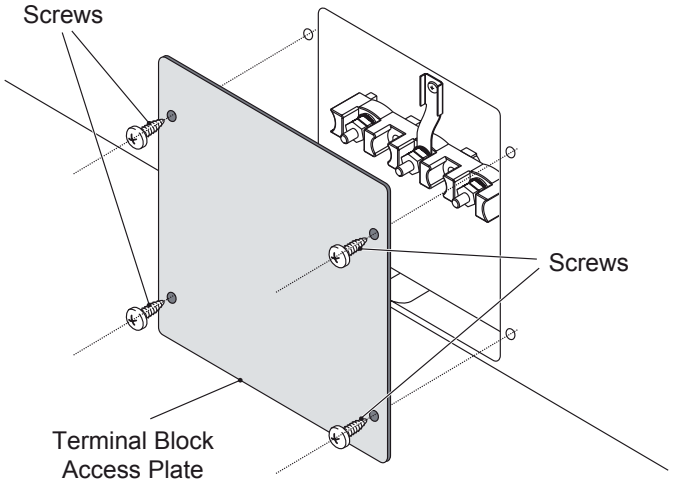

4-Wire Power Cord Installation (See Figure 3.3)

1. Remove the **Terminal Block Access Plate** on the back of the range by unscrewing the 4 fixing **Screws** (Figure 3.1).
2. Check the correct positioning of the **Power Cord Bracket** as per figure 3.3.
3. Assemble the strain relief in the hole on **Power Cord Bracket**.
4. Insert the **Power Cord** through the strain relief and tighten.
5. Remove the 3 wire terminal nuts and washers from the **Terminal Block**.
6. Remove the **Ground Strap** from the frame of range and terminal by removing its screw and cutting it as shown in Figure 3.3.
7. Plug the terminal holes of **Power Cord**.
   The **Neutral Wire** of the **Power Cord** must be connected to the neutral terminal located in the center of **Terminal Block**; the **Power Wires** must be connected to the outside terminals; the **Ground Wire** must be attached to the frame of range by using the (Ground) identified ⏚ **Grounding Screw**.
8. Plug washers and tighten nuts securely.
9. Reassemble the **Terminal Block Access Plate** on the back of the range by screwing the 4 fixing **Screws** (Figure 3.1).

Fig. 3.2

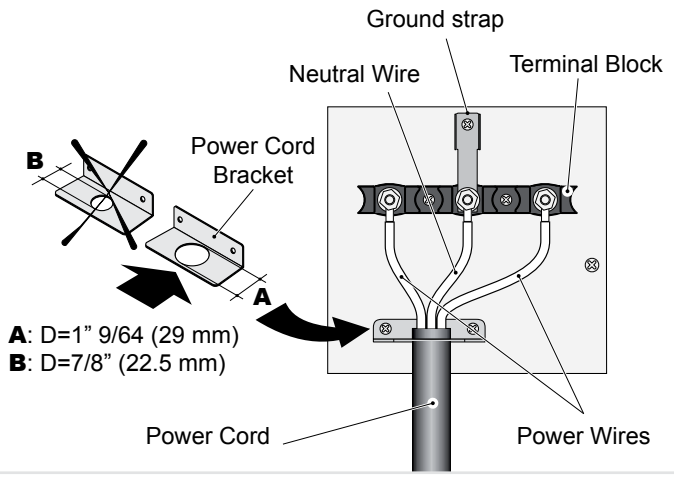

Fig. 3.3

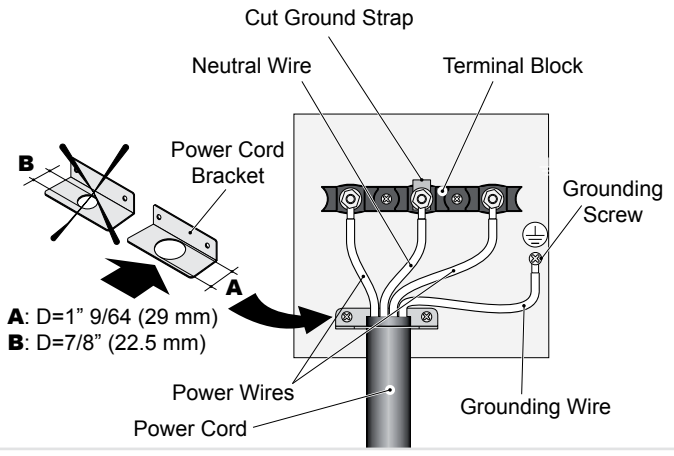

Fig. 3.4

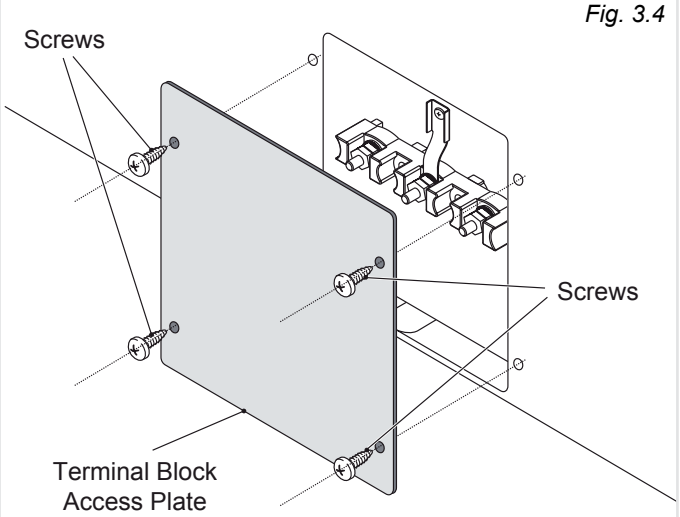

3-Wire Conduit Installation (See Figure 3.5)

1. Remove the **Terminal Block Access Plate** on the back of the range by unscrewing the 4 fixing **Screws** (Figure 3.4).
2. Check the correct positioning of the **Conduit Bracket** as per figure 3.5.
3. Feed 1/2" (1.3 cm) trade size **Conduit** through the hole in the **Conduit Bracket** and secure to the **Conduit Bracket** with a **Conduit Clamp**.
4. Plug the terminal holes of conductors.
   The **Neutral or Ground Wire** must be connected to the neutral terminal located in the center of **Terminal Block**.
   The **Power Wires** must be connected to the outside terminals.
5. Plug washers and tighten nuts securely.

   ⚠ Do not remove **Ground strap**.
6. Reassemble the **Terminal Block Access Plate** on the back of the range by screwing the 4 fixing **Screws** (Figure 3.4).

Fig. 3.5

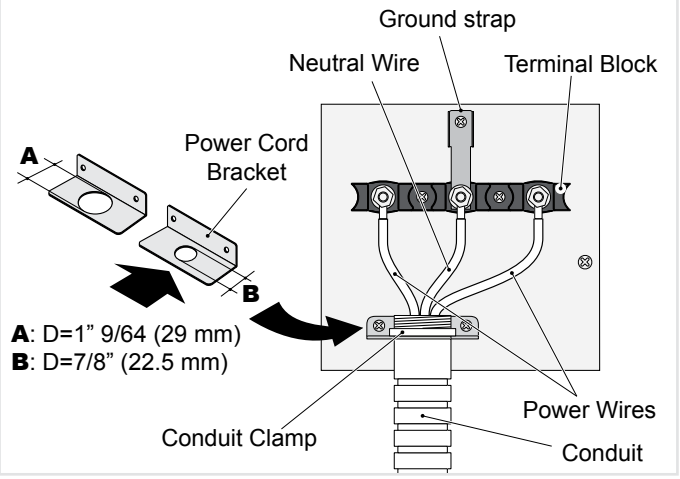

4-Wire Conduit Installation (See Figure 3.6)

1. Remove the **Terminal Block Access Plate** on the back of the range by unscrewing the 4 fixing **Screws** (Figure 3.4).
2. Check the correct positioning of the **Conduit Bracket** as per figure 3.6.
3. Feed 1/2" (1.3 cm) trade size **Conduit** through the hole in the **Conduit Bracket** and secure to the **Conduit Bracket** with a **Conduit Clamp**.
4. Remove the 3 wire terminal nuts and washers from the **Terminal Block**.
5. Remove the **Ground Strap** from the frame of range and terminal by removing its screw and cutting it as shown in Figure 3.6.
6. Plug the terminal holes of conductors.
   The **Neutral Wire** must be connected to the neutral terminal located in the center of **Terminal Block**; the **Power Wires** must be connected to the outside terminals; the **Ground Wire** must be attached to the frame of range by using the (Ground) identified ⏚ **Grounding Screw**.
7. Plug washers and tighten nuts securely.
8. Reassemble the **Terminal Block Access Plate** on the back of the range by screwing the 4 fixing **Screws** (Figure 3.4).

Fig. 3.6

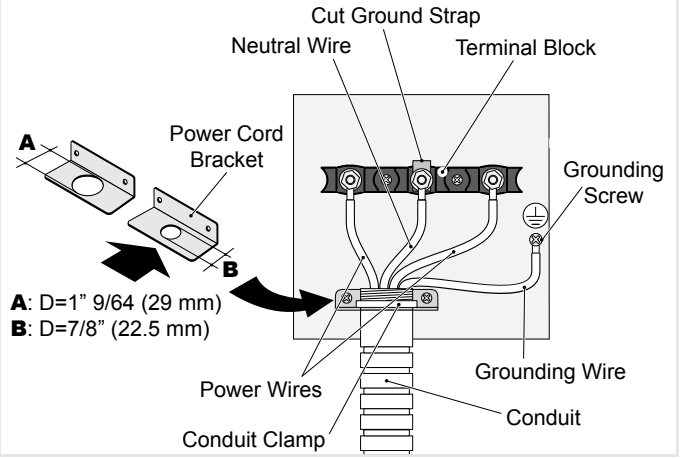

WIRING DIAGRAM

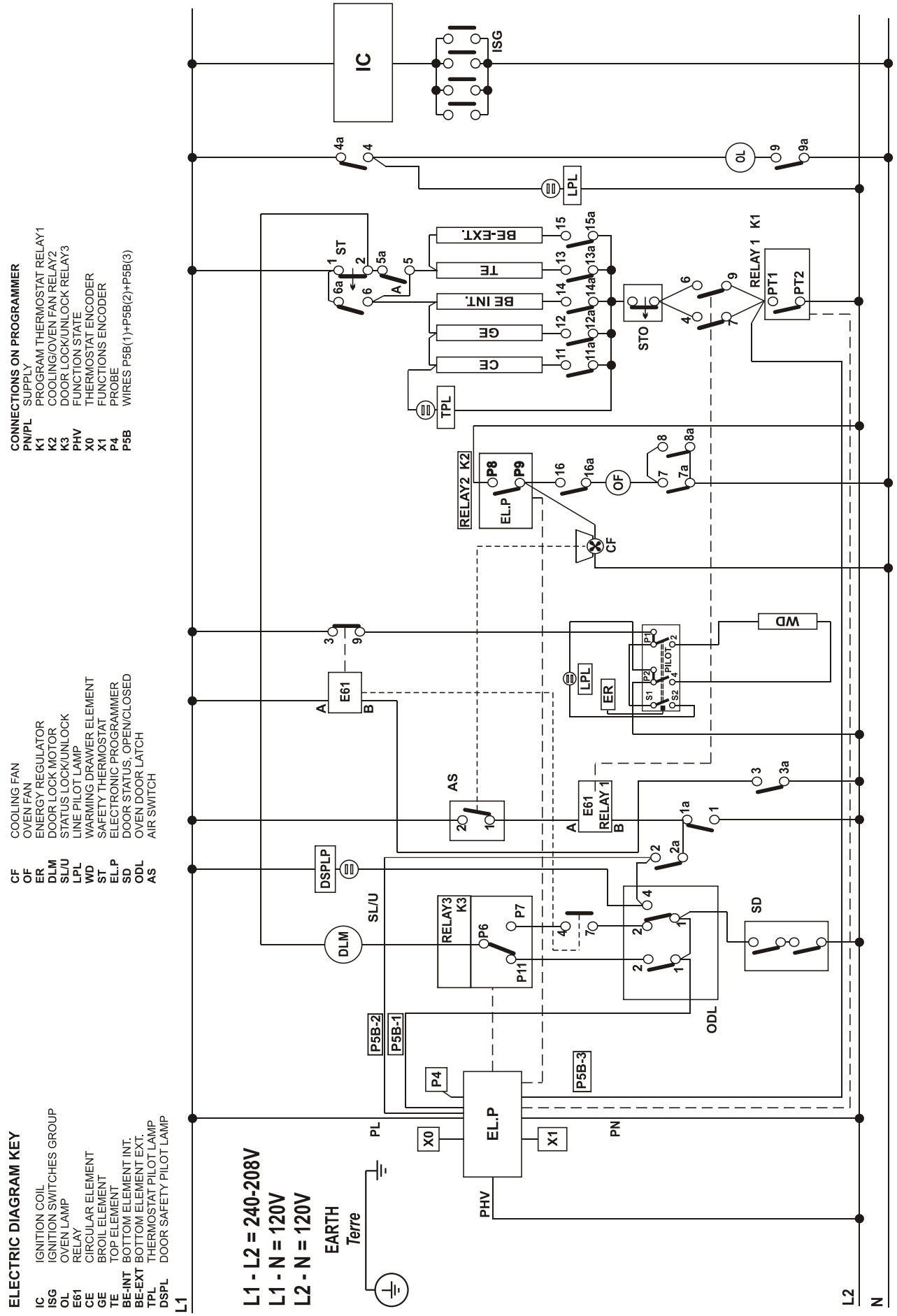

The manufacturer cannot be held responsible for possible inaccuracies due to printing or transcription errors in the present booklet.
The manufacturer reserves the right to make all modifications to its products deemed necessary for manufacture or commercial reasons at any moment and without prior notice, without jeopardising the essential functional and safety characteristics of the appliances.