ME21H706MQ*

Microwave Oven

user manual

Planet First **100 % Recycled Paper**

This manual is made with 100 % recycled paper.

imagine the possibilities

Thank you for purchasing this Samsung product.

SAMSUNG

ME21H706MQS_AA_AC_EN_140630-1.indd 1 2014-06-30 5:42:47

safety information

Congratulations on your new Samsung microwave oven. This manual contains important information on the installation, use and care of your appliance. Please take time to read this manual to take full advantage of your microwave oven's many benefits and features.

WHAT YOU NEED TO KNOW ABOUT SAFETY INSTRUCTIONS

Warnings and Important Safety Instructions in this manual do not cover all possible conditions and situations that may occur. It is your responsibility to use common sense, caution, and care when installing, maintaining, and operating your microwave oven.

PRECAUTIONS TO AVOID POSSIBLE EXPOSURE TO EXCESSIVE MICROWAVE ENERGY

A. Do not attempt to operate this oven with the door open since open-door operation can result in harmful exposure to microwave energy. It is important not to defeat or tamper with the safety interlocks.

B. Do not place any object between the oven front face and the door or allow soil or cleaner residue to accumulate on the sealing surface.

C. Do not operate the oven if it is damaged. It is particularly important that the oven door closes properly and that:

1. The door is not bent or damaged
2. The hinges and latches are not broken or loosened
3. The door seals and sealing surface are clean and operative.

D. Only properly qualified service personnel should adjust or repair the oven. Do not attempt to adjust or repair the oven yourself.

IMPORTANT SAFETY SYMBOLS AND PRECAUTIONS

What the icons and signs in this user manual mean:

WARNING	Hazards or unsafe practices that may result in **severe personal injury or death.**
CAUTION	Hazards or unsafe practices that may result in **minor personal injury or property damage.**
CAUTION	To reduce the risk of fire, explosion, electric shock, or personal injury when using your microwave oven, follow these basic safety precautions.

	Do NOT attempt.
	Do NOT disassemble.
	Do NOT touch.
	Follow directions explicitly.
	Unplug the power plug from the wall socket.
	Make sure the machine is grounded to prevent electric shock.
	Call the service center for help.
	Note

These warning signs are here to prevent injury to you and others. Please follow them explicitly. After reading this section, keep it in a safe place for future reference.

SAVE THESE INSTRUCTIONS

ME21H706MQS_AA_AC_EN_140630-1.indd 2 2014-06-30 5:42:48

IMPORTANT SAFETY INSTRUCTIONS

When using any electrical appliance, basic safety precautions should be followed, including the following:

⚠ WARNING

To reduce risk of burns, electric shock, fire, personal injury or exposure to excessive microwave energy:

1. Read all safety instructions before using the appliance.
2. Read and follow the specific “Precautions to avoid possible exposure to excessive microwave energy” on this page.
3. This appliance must be grounded. Connect only to properly grounded outlets. See Important “Grounding instructions” on page 4 of this manual.
4. Install or locate this appliance only in accordance with the provided installation instructions.
5. Some products such as whole eggs and sealed containers (for example, sealed glass jars), can explode if heated rapidly. Never heat them in a microwave oven.
6. Use this appliance only for its intended use as described in the manual. Do not put corrosive chemicals or vapors in or on this appliance. This type of oven is specifically designed to heat, cook, or dry food. It is not designed for industrial or laboratory use.
7. As with any appliance, close supervision is necessary when it is used by children.
8. Do not operate this appliance if it has a damaged power cord or plug, if it is not working properly, or if it has been damaged or dropped.
9. This appliance should be repaired or serviced only by qualified service personnel. Contact the nearest authorized service facility for examination, repair, or adjustment.
10. Do not cover or block any openings on the appliance.
11. Do not tamper with or make any adjustments or repairs to the door.
12. Do not store this appliance outdoors. Do not use this product near water, for example, near a kitchen sink, in a wet basement, near a swimming pool, or similar locations.
13. Do not immerse the power cord or plug in water.
14. Keep the cord away from heated surfaces. (including the back of the oven).
15. Do not let the cord hang over the edge of a table or counter.
16. When cleaning surfaces of the door and oven that come together when the door closes, use only mild, nonabrasive soaps, or detergents applied with a sponge or soft cloth. Unplug the microwave before cleaning.
17. To reduce the risk of fire in the oven cavity.
    a. Do not overcook food. Carefully attend appliance when paper, plastic, or other combustible materials are placed inside the oven to facilitate cooking.
    b. Remove wire twist-ties from paper or plastic bags before placing the bags in the oven.
    c. If materials inside the oven ignite, keep the oven door closed, turn the oven off, and disconnect the power cord, or shut off the power at the fuse or circuit breaker panel. If the door is opened, the fire may spread.
    d. Do not use the cavity for storage purposes. Do not leave paper products, cooking utensils, or food in the cavity when it is not in use.
18. Liquids, such as water, milk, coffee, or tea can be overheated beyond the boiling point without appearing to be boiling. Visible bubbling or boiling when the container is removed from the microwave oven is not always present. THIS COULD RESULT IN VERY HOT LIQUIDS SUDDENLY BOILING OVER WHEN THE CONTAINER IS DISTURBED OR A SPOON OR OTHER UTENSIL IS INSERTED INTO THE LIQUID. To reduce the risk of injury:
    a. Do not overheat liquid.
    b. Stir liquid both before and halfway through heating it.
    c. Do not use straight-sided containers with narrow necks.
    d. After heating, allow the container to stand in the microwave oven for a short time before removing the container.
    e. Use extreme care when inserting a spoon or other utensil into the container.

⚠ CAUTION

1. Clean Ventilating Hoods Frequently - Grease should not be allowed to accumulate on the hood or filter.
2. When flaming foods under the hood, turn the fan on.
3. Use care when cleaning the vent-hood filter. Corrosive cleaning agents, such as lye-based oven cleaner, may damage the filter.

SAVE THESE INSTRUCTIONS

ME21H706MQS_AA_AC_EN_140630-1.indd 3 2014-06-30 5:42:48

GROUNDING INSTRUCTIONS

This appliance must be grounded. In the event of an electrical short circuit, grounding reduces the risk of electric shock by providing an escape wire for the electrical current. This appliance is equipped with a cord that includes a grounding wire and a grounding plug. The plug must be plugged into an outlet that is properly installed and grounded.

⚠ WARNING WARNING

Improper use of the grounding plug can result in a risk of electric shock.

- Plug into a grounded 3 prong outlet. Do not remove the third (grounding) prong. Do not use an adaptor or otherwise defeat the grounding plug.
- Consult a qualified electrician or service person if you do not understand the grounding instructions or if you are not sure if the appliance is properly grounded.
- We do not recommend using an extension cord with this appliance. If the power-supply cord is too short, have a qualified electrician or serviceman install an outlet near the appliance. However, if it is necessary to use an extension cord, read and follow the "Use of Extension Cords" section below.

Use of Extension Cords

A short power-supply cord is provided to reduce the risk of your becoming entangled in or tripping over a longer cord. Longer cord sets or extension cords are available and you can use them if you exercise care. If you use a long cord or extension cord:

1. The marked electrical rating of the cord set or extension cord should be at least as great as the electrical rating of the appliance.
2. The extension cord must be a grounding-type 3-wire cord and it must be plugged into a 3-slot outlet.
3. The longer cord should be arranged so that it will not drape over the counter top or tabletop where it can be pulled on by children or tripped over accidentally. If you use an extension cord, the interior light may flicker and the speed of the blower may vary when the microwave oven is on. Cooking times may be longer too.

⚠ WARNING CRITICAL INSTALLATION WARNINGS

This appliance must be installed by a qualified technician or service company.

- Failing to have a qualified technician install the oven may result in electric shock, fire, an explosion, problems with the product, or injury.

Unpack the oven, remove all packaging material and examine the oven for any damage such as dents on the interior or exterior of the oven, broken door latches, cracks in the door, or a door that is not lined up correctly. If there is any damage, do not operate the oven and notify your dealer immediately.

Make sure to install your oven in a location with adequate space.

Remove all foreign substances such as dust or water from the power plug terminals and contact points using a dry cloth on a regular basis.

- Unplug the power plug and clean it with a dry cloth.
- Failing to do so may result in electric shock or fire.

Plug the power cord into a properly grounded 3 pronged outlet. Your oven should be the only appliance connected to this circuit.

- Sharing a wall socket with other appliances, using a power strip, or extending the power cord may result in electric shock or fire.
- Do not use an electric transformer. It may result in electric shock or fire.
- Ensure that the voltage, frequency and current provided match the product's specifications. Failing to do so may result in electric shock or fire.

Keep all packaging materials out of the reach of children. Children may use them for play.

This appliance must be properly grounded. Read and follow the specific "Grounding instructions" found in the beginning of this Section. Do not ground the appliance to a gas pipe, plastic water pipe, or telephone line.

- This may result in electric shock, fire, an explosion, or problems with the product
- Never plug the power cord into a socket that is not grounded correctly and make sure that it is in accordance with local and national codes.

Do not cut or remove the third (ground) prong from the power cord under any circumstances.

Connect the oven to a 20A circuit. If you connect the oven to a 15A circuit, make sure that circuit breaker is operable.

Do not install this appliance in a humid, oily, or dusty location, or in a location exposed to direct sunlight or water (rain drops).

- This may result in electric shock or fire.

Plug the power plug into the wall socket firmly. Do not use a damaged power plug, damaged power cord, or loose wall socket.

- This may result in electric shock or fire.

Do not mount over a sink.

Do not pull or excessively bend the power cord.

Do not twist or tie the power cord.

Do not hook the power cord over a metal object, place a heavy object on the power cord, insert the power cord between objects, or push the power cord into the space behind the appliance.

- This may result in electric shock or fire.

Do not pull the power cord when you unplug the oven.

- Unplug the oven by pulling the plug only.
- Failing to do so may result in electric shock or fire.

SAVE THESE INSTRUCTIONS

ME21H706MQS_AA_AC_EN_140630-1.indd 4 2014-06-30 5:42:48

When the power plug or power cord is damaged, contact your nearest service center for a replacement or repair.

⚠ CAUTION INSTALLATION CAUTIONS

Position the oven so that the plug is easily accessible.

- Failing to do so may result in electric shock or fire due to electric leakage.

Unplug the oven when it is not being used for long periods of time or during a thunder/lightning storm.

- Failing to do so may result in electric shock or fire.

⚠ WARNING CRITICAL USAGE WARNINGS

If the microwave appliance is flooded please contact your nearest service center : Failing to do so may result in electric shock or fire.

Read and follow the specific “Precautions to Avoid Possible Exposure to Excessive Microwave Energy”, found in the beginning of this Section.

If the microwave generates a strange noise, a burning smell, or smoke, unplug it immediately and contact your nearest service center.

- Failing to do so may result in electric shock or fire.

In the event of a gas leak (propane gas, LP gas, etc.), ventilate the room immediately. Do not touch the microwave, power cord, or plug.

- Do not use a ventilating fan.
- A spark may result in an explosion or fire.

Take care that the door or any of the other parts do not come into contact with your body while cooking or just after cooking.

- Failing to do so may result in burns.

In the event of a grease fire on the surface units below the oven, smother the flaming pan on the surface unit by covering the pan completely with a lid, a cookie sheet or a flat tray.

Never leave surface units beneath your oven unattended at high heat settings. Boil overs cause smoking and greasy spillovers that may ignite and spread if the vent fan is operating. To minimize automatic fan operation, use adequate sized cookware and use high heat on surface units only when necessary.

If materials inside the oven should ignite, keep the oven door closed, turn the oven off, and disconnect the power cord, or shut off power at the fuse or circuit breaker panel. If the door is opened, the fire may spread.

- Always observe Safety Precautions when using your oven. Never try to repair the oven on your own. There is dangerous voltage inside. If the oven needs to be repaired, contact an authorized service center near you.

Do not attempt to repair, disassemble, or modify the appliance yourself.

- Because a high voltage current enters the product chassis during operation, opening the chassis can result in electric shock or fire.
- You may be exposed to electromagnetic waves.
- When the oven requires repair, contact your nearest service center.

If any foreign substance such as water enters the microwave, unplug it and contact your nearest service center.

- Failing to do so may result in electric shock or fire.

Do not touch the power plug with wet hands.

- This may result in electric shock.

Do not turn the appliance off by unplugging the power plug while the appliance is in operation.

- Plugging the power plug into the wall socket again may cause a spark and result in electric shock or fire.

Keep all packaging materials well out of the reach of children. Packaging materials can be dangerous to children.

- If a child places a bag over its head, the child can suffocate

Do not let children or any person with reduced physical, sensory or, mental capabilities use this appliance unsupervised.
Make sure that the appliance is out of the reach of children.

- Failing to do so may result in electric shock, burns, or injury.
- Keep children away from the door when opening or closing it as they may bump themselves on the door or catch their fingers in the door.

Do not touch the inside of the appliance immediately after cooking. The inside of the appliance will be hot.

- The heat on the inside of the oven can cause burns.

Do not put aluminum foil (except as specifically directed in this manual), metal objects (such as containers, forks, etc.), or containers with golden or silver rims into the microwave.

- These objects can cause sparks or a fire.

Do not use or place flammable sprays or objects near the oven.

- Heat from the microwave can cause flammable sprays to explode or burn.
- Failing to do so may result in electric shock or injury.

Do not tamper with or make any adjustments or repairs to the door. Under no circumstances should you remove the outer cabinet.

Do not store or use the oven outdoors.

SAVE THESE INSTRUCTIONS

ME21H706MQS_AA_AC_EN_140630-1.indd 5 2014-06-30 5:42:49

⚠ CAUTION USAGE CAUTIONS

If the surface of the microwave is cracked, turn it off.
- Failing to do so may result in electric shock.

Dishes and containers can become hot. Handle with care.

Hot foods and steam can cause burns. Carefully remove container coverings, directing steam away from your hands and face.

Remove lids from baby food before heating. After heating baby food, stir well to distribute the heat evenly. Always test the temperature by tasting before feeding the baby. The glass jar or surface of the food may appear to be cooler than the food in the interior, which can be so hot that it will burn the infant's mouth.

Make sure all cookware used in the oven is suitable for microwaving.

Use microwavable cookware in strict compliance with such manufacturer's recommendations.

Do not stand on top of the microwave or place objects (such as laundry, oven covers, lighted candles, lighted cigarettes, dishes, chemicals, metal objects, etc.) on the appliance.
- Items, such as a cloth, may get caught in the door.
- This may result in electric shock, fire, problems with the product, or injury.

Do not operate the appliance with wet hands.
- This may result in electric shock.

Do not spray volatile material such as insecticide onto the surface of the appliance.
- As well as being harmful to humans, it may also result in electric shock, fire, or problems with the product.

Do not place the appliance over a fragile object such as a sink or glass object.
- This may result in damage to the sink or glass object.

Do not put your face or body close to the appliance while cooking or when opening the door just after cooking.
- Take care that children do not come too close to the appliance.
- Failing to do so may result in children burning themselves.

Do not place food or heavy objects over the door when opening the door.
- The food or object may fall and this may result in burns or injury.

Do not abruptly cool the door, the inside of the appliance, or the dish by pouring water over it during or just after cooking.
- This may result in damage to the appliance. The steam or water spray may result in burns or injury.

Do not try to preheat the oven or operate it while empty.

Do not cook without the glass tray in place on the oven floor. Food will not cook properly without the tray.

Do not defrost frozen beverages in narrow-necked bottles. The containers can break.

Do not scratch the glass of the oven door with a sharp object.
- This may result in the glass being damaged or broken.

Do not store anything directly on top of the appliance when it is in operation.

Do not use sealed containers. Remove seals and lids before use. Sealed containers can explode due to buildup of pressure even after oven has been turned off.

⚠ WARNING CRITICAL CLEANING INSTRUCTIONS

Do not clean the appliance by spraying water directly onto it.

Do not use benzene, thinner, or alcohol to clean the appliance.
- This may result in discoloration, deformation, damage, electric shock, or fire.

Before cleaning or performing maintenance, unplug the appliance from the wall socket and remove food waste from the door and cooking compartment.
- Failing to do so may result in electric shock or fire.

Take care not to hurt yourself when cleaning the appliance (external/internal)
- You may hurt yourself on the sharp edges of the appliance.

Do not clean the appliance with a steam cleaner.
- This may result in corrosion.

Keep the inside of the oven clean. Food particles or spattered oils stuck to the oven walls or floor can cause paint damage and reduce the efficiency of the oven.

⚠ WARNING STATE OF CALIFORNIA PROPOSITION 65 WARNINGS:

WARNING: This product contains chemicals known to the State of California to cause cancer and reproductive toxicity.

SAVE THESE INSTRUCTIONS

ME21H706MQS_AA_AC_EN_140630-1.indd 6 2014-06-30 5:42:49

contents

SETTING UP YOUR MICROWAVE OVEN

8
- **8** Checking the parts
- **8** Warranty and service information
- **8** Setting up your microwave oven
- **9** Features
- **9** The control panel
- **10** Setting the time
- **10** Child lock
- **10** Options

USING YOUR MICROWAVE OVEN

10
- **10** Kitchen timer button
- **10** Add 30 sec button
- **10** Vent buttons (4 speed & on/off)
- **10** Vent delay off button
- **10** Light hi/lo/off button
- **11** Set timer button
- **11** Turntable on/off button
- **11** Metal shelf
- **11** Eco mode
- **12** Smart multi sensor cooking buttons
- **13** Smart defrost button
- **14** Fit choice button
- **15** 1 Pound defrost button
- **15** Soften/melt button
- **15** Kids meals button
- **16** Snacks button
- **16** Microwave cooking times & Power levels
- **17** Keep warm
- **17** Favorite cook button

COOKWARE GUIDE

17
- **17** Microwave-safe utensils

COOKING GUIDE

18
- **18** General microwave tips
- **19** Cooking meat
- **19** Cooking poultry
- **20** Cooking seafood
- **20** Cooking eggs
- **20** Cooking vegetables
- **20** Recipes

CLEANING AND MAINTAINING YOUR MICROWAVE OVEN

21
- **21** Cleaning the exterior
- **21** Cleaning the interior
- **22** Cleaning the turntable and roller rings
- **22** Storing and repairing your microwave oven
- **22** Replacing the cooktop/night light
- **22** Replacing the oven light
- **22** Cleaning the grease filter
- **23** Replacing the charcoal filter

TROUBLESHOOTING

24

APPENDIX

24

WARRANTY (USA)

25

WARRANTY (CANADA)

26

ME21H706MQS_AA_AC_EN_140630-1.indd 7 2014-06-30 5:42:49

setting up your microwave oven

Be sure to follow these instructions closely so that your new microwave oven works properly.

CHECKING THE PARTS

Carefully unpack your microwave oven, and make sure you've received all the parts shown below. If your microwave oven was damaged during shipping, or if you do not have all the parts, contact Samsung Customer Service. (Refer to the "Warranty and service information" on page 8.)

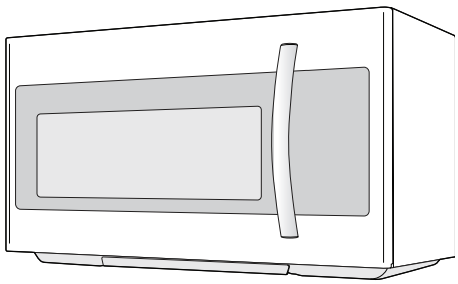

Microwave oven (ME21H706MQ*)

*** Shelf**

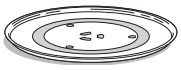

*** Glass Tray**

*** Roller Guide Ring**

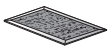

*** Grease filter (Installed)**

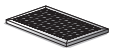

*** Charcoal filter**

*** Exhaust adaptor**

*** Hardware kit (Screws & Brackets)**

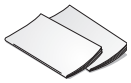

Manuals (User & Installation)

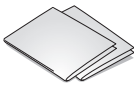

Templates (Top & Wall)

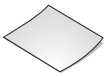

Manual Guide (For IR Sensor)

If you need an accessory marked with a *, you can buy it from the Samsung Contact Center (1-800-726-7864).

WARRANTY AND SERVICE INFORMATION

To help us to serve you better, please complete the enclosed registration card and promptly return it by mail. If the registration card is missing, you can call Samsung Electronics, Inc., at
1-800-SAMSUNG (726-7864) or register online at www.samsung.com/register.
When contacting Samsung, please provide the specific model and serial number information which is usually located on the back or bottom of the product. Please record these numbers in the spaces provided below, along with the other requested information. Keep this information in a safe place as a permanent record of your purchase to aid in identification in case of theft or loss. Also keep a copy of your sales receipt as a proof of purchase if warranty service is needed.

MODEL NUMBER _____

SERIAL NUMBER _____

DATE PURCHASED _____

PURCHASED FROM _____

Warranty service can only be performed by a Samsung Authorized Service Center. If you should require warranty service, provide the above information with a copy of your sales receipt to the Samsung Authorized Service Center. For service assistance and the location of the nearest service center, please call **1-800- SAMSUNG (726-7864)**.

SETTING UP YOUR MICROWAVE OVEN

1. Open the door by pulling the handle on the right side of the door.
2. Wipe the inside of the oven with a damp cloth.

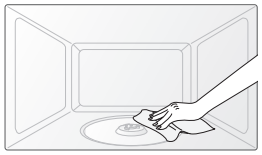

3. Install the pre-assembled ring into the indentation at the center of the microwave oven.

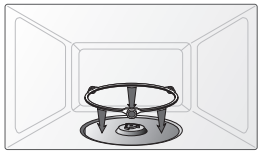

4. Place the glass tray securely in the center of the pre-assembled roller ring.

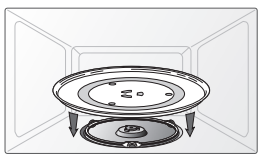

ME21H706MQS_AA_AC_EN_140630-1.indd 8 2014-06-30 5:42:51

FEATURES

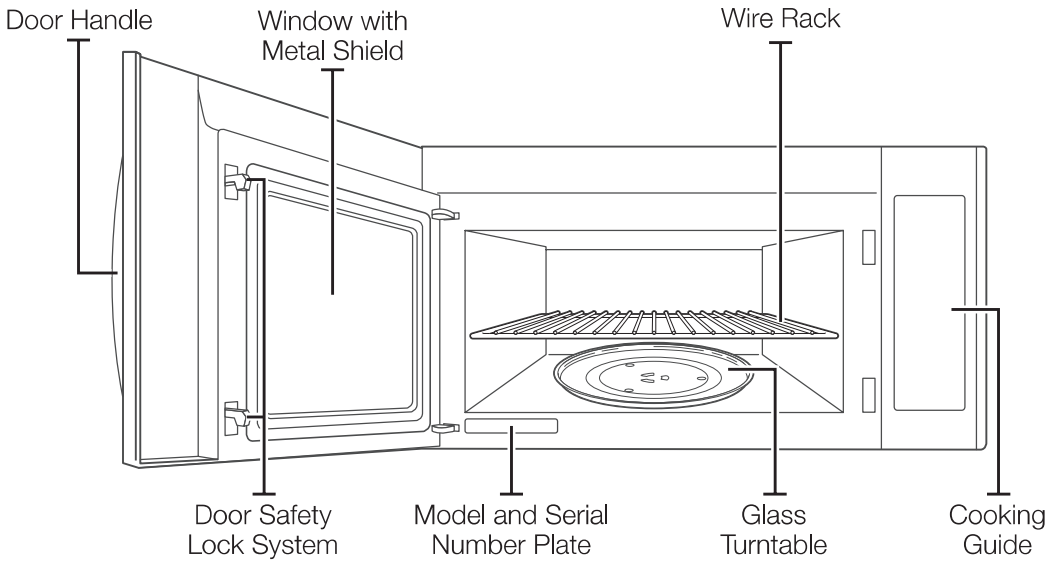

THE CONTROL PANEL

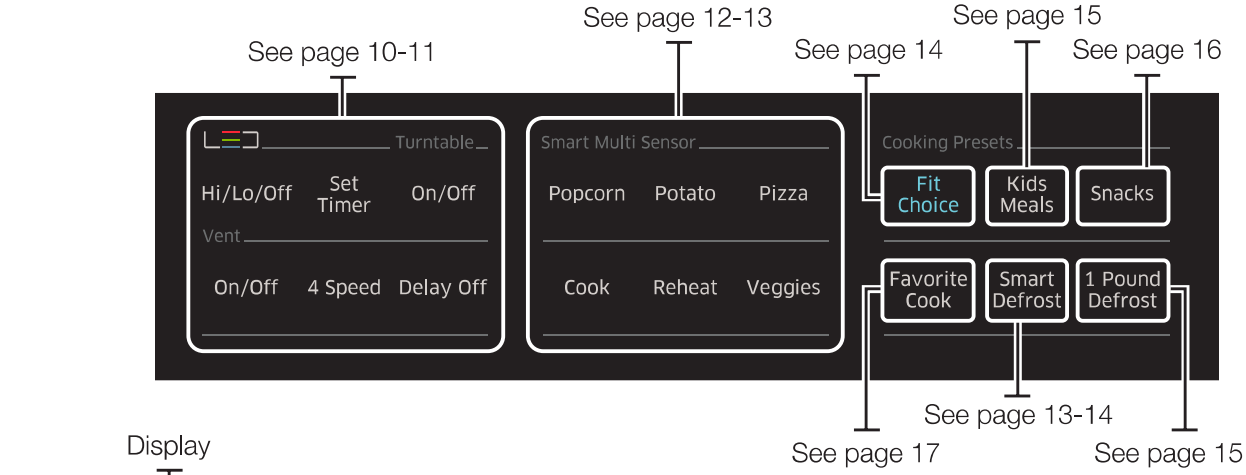

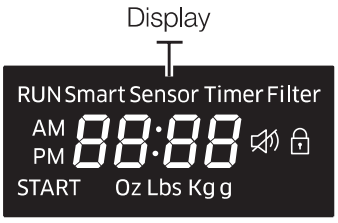

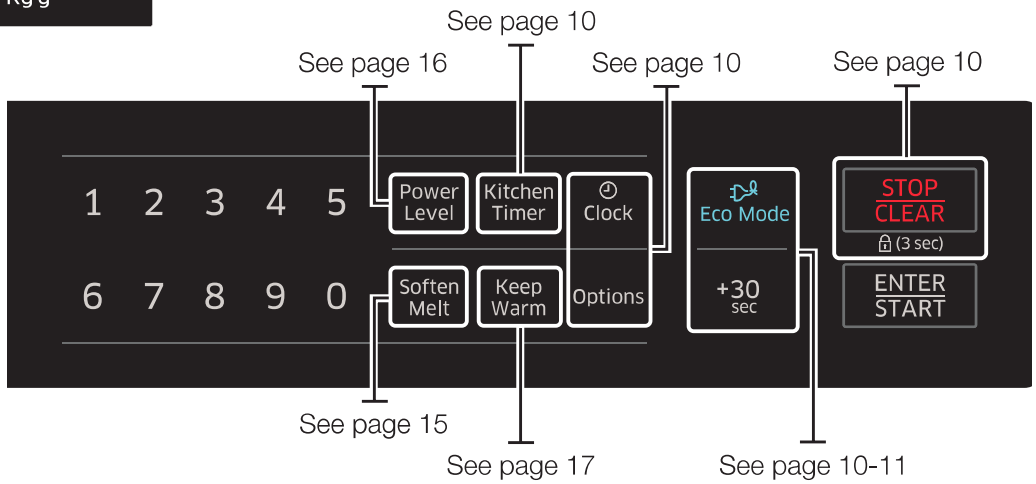

ME21H706MQS_AA_AC_EN_140630-1.indd 9 2014-06-30 5:42:51

SETTING THE TIME

Your microwave oven is equipped with a built-in clock. Set the clock when first installing your microwave oven and after a power failure. The time is displayed whenever the microwave oven is not being used.

1. Press the **Clock** button.
2. Use the number buttons to enter the current time. You need to press at least three numbers to set the clock. For example, if the current time is 5:00, press 5, 0, 0. The display will show: *500*.
3. Press the **Clock** button.
4. Use the **Clock** button to select AM / PM.
5. Press the **ENTER/START** button.
6. A colon appears indicating that the time is set.

To check the time while cooking, press the **Clock** button.

CHILD LOCK

The Child Lock function allows you to lock the buttons so that the microwave oven cannot be operated accidentally. The oven can be locked at any time.

Activating/Deactivating

If you want to activate or deactivate the child lock function, press the **STOP/CLEAR** button for 3 seconds. The display will show *ON* or *OFF* when the oven is locked or unlocked, and then re-displays the time.

OPTIONS

You can customize your new microwave oven to suit your preferences. To customize:

1. Press the **Options** button.
2. Press the number button that corresponds to the function you want to customize.
3. Press the number that corresponds to the option you want to set.
4. Press the **ENTER/START** button to set the option.

The functions, options, and corresponding number buttons are listed in the table below.

No.	Function	Options
1	Weight mode selected	1 Lbs. 2 Kg. (Gram)
2	Clock display control	1 12HR 2 24HR
3	Sound on/off control	1 Sound ON 2 Sound OFF
4	Remind end signal	1 ON 2 OFF
5	Daylight Saving time	1 ON 2 OFF
6	Demo mode	1 ON 2 OFF
7	Filter Reminder	1 ON 2 OFF

Filter Reminder

The filter should be cleaned or replaced once every four months. When it is time to clean or replace the filter, the microwave displays the “Filter” message to remind you to clean or replace the filter. To remove the message, touch the number 0 when the microwave is in standby mode, or access **Options**.

using your microwave oven

Cooking has never been easier than with your new Samsung microwave oven.
The following section describes everything you need to know about using your microwave oven.

KITCHEN TIMER BUTTON

Use the Kitchen Timer for timing up to 99 minutes, 99 seconds.

1. Press the **Kitchen Timer** button.
2. Use the number buttons to set the length of time you want the timer to run.
3. Press the **ENTER/START** button
4. The display counts down and beeps when the time has elapsed.
5. To cancel the timer setting: Press the **STOP/CLEAR** button once.

ADD 30 SEC BUTTON

This simplified control saves you time, letting you quickly start cooking at 100 % power.

1. Press the **Add 30 sec** button for each 30 seconds you want food to cook. For example, press it twice to cook for one minute, and then press the **ENTER/START** button to start cooking.
2. Add 30 sec to a cooking program already in progress by pressing the **Add 30 sec** button for every additional 30 seconds you want to add.

VENT BUTTONS (4 SPEED & ON/OFF)

The vent removes steam and other vapors from the cooking surface. You can manually select the vent setting.

1. Press the **Vent 4 Speed** button to set the speed level.
2. Press the **Vent On/Off** button to turn the vent on.
3. Press the **Vent On/Off** button again to turn the vent off.

The exhaust fan’s speed will reduce when the oven’s cooking function is activated.

VENT DELAY OFF BUTTON

Press the **Delay Off** button once to turn the fan off after a certain number of minutes. The number of minutes depends on how many times you press the button.

Press (times)	1	2	3	4	5
Delay off (min)	1	3	5	10	30

LIGHT HI/LO/OFF BUTTON

The **Light** button allows you to select a light setting for your microwave.

Press (times)	1	2	3
Light	High	Low	Off

ME21H706MQS_AA_AC_EN_140630-1.indd 10 2014-06-30 5:42:52

SET TIMER BUTTON

You can set the microwave so the light turns on and off automatically at a preset time. The light comes on at the same time every day until reset.

1. Press the **Set Timer** button.
2. Use the number buttons to set the light on time.
3. Press the **Clock** button to select AM or PM.
4. Press the **ENTER/START** button.
5. Use the number buttons to set the light off time.
6. Press the **Clock** button to select AM or PM.
7. Press the **ENTER/START** button.

TURNTABLE ON/OFF BUTTON

For best cooking results, leave the turntable on. However, for large dishes it can be turned off.
Press the **Turntable On/Off** button to turn the turntable on or off.

CAUTION The turntable may become too hot to touch. Use pot holders to touch the turntable during and after cooking.

METAL SHELF

Use the metal shelf to cook more than one item at the same time.

CAUTION
- Do not use a microwave browning dish on the shelf. The shelf could overheat.
- Do not use the oven with the shelf on the microwave floor. This could damage the microwave.
- Use pot holders when handling the shelf as it may be hot.
- Do not use the metal shelf when cooking popcorn.

Food cooks best on the turntable.

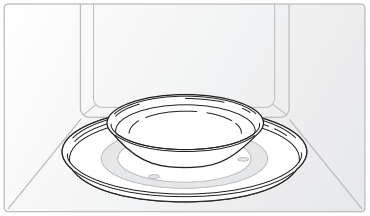

For best results

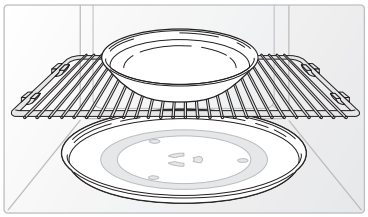

Uneven results

The shelf gives you the option to reheat more than one dish at the same time.

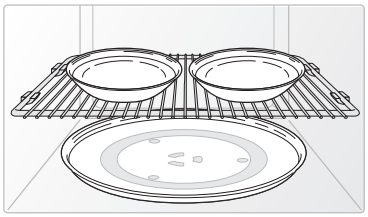

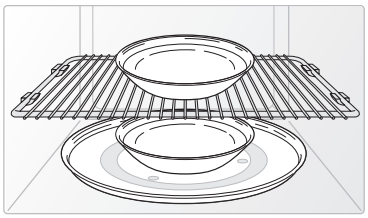

Reheating food

To reheat food on 2 levels or to reheat food on the lower level:
- Multiply the reheating time by 1½.
- Switch places halfway through the reheating process.

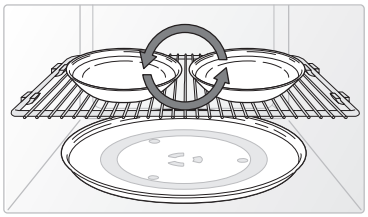

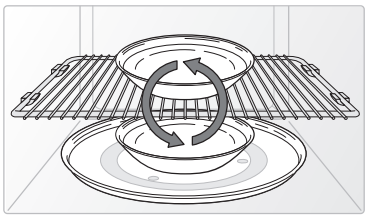

ECO MODE

Eco Mode reduces standby power usage.
When you press the **Eco Mode** button once, the display will go out and the microwave shifts to the mode which minimizes power usage.
To cancel the **Eco Mode**, press the **Eco Mode** button once again, or press any other button.

ME21H706MQS_AA_AC_EN_140630-1.indd 11 2014-06-30 5:42:53

SMART MULTI SENSOR COOKING BUTTONS

Smart Multi Sensor Cooking lets you cook your favorite foods automatically, with the press of a button. When you activate Smart Multi Sensor Cooking, the microwave's Smart Multi Sensor detects the temperature of the food while it cooks and automatically shuts the microwave off when it detects that the food has been cooked to the ideal temperature.

CAUTION Do not use the **Smart Multi Sensor Cooking** buttons continuously. The oven must cool for 5 minutes between uses or the food will overcook.

Smart Multi Sensor cooking utensils & covers

To obtain good cooking results using these functions, follow the directions for selecting appropriate containers and covers in the Cookware Guide section on page 17-18.

CAUTION Always use microwave-safe containers and abide by the cautions listed in the Safety Information section in this manual. When using plastic wrap, turn back one corner to allow steam to escape or pierce the plastic in several places.

CAUTION Fill containers at least half full.

Do not use the Smart Multi Sensor cooking feature continuously. Wait 5 minutes before selecting another sensor cooking operation.

For the best cooking results, do not use the Smart Multi Sensor when the ambient room temperature is too high or too low.

Install the oven in a well ventilated location for proper cooling and airflow and to ensure the sensor will operate accurately.

Always keep the inside of the oven clean. Wipe all spills with a damp cloth. This oven is designed for household use only.

For the best cooking results, food or cookware should be placed in the center of turntable.

For the best cooking results, food should weigh more than 1/2 pounds.

For the best cooking results, avoid microwaving long, thin foods and microwaving food in straight-sided containers with narrow necks such as bottles and jars.

For the best cooking results, do not cover food with lids not recommended in this manual.

When you use Smart Multi Sensor Cooking, follow the wrapping guide below. Otherwise, the food may not cook properly.

Menu	Wrapping guide
Chicken breast Casserole Dinner Plate Pasta Fresh Vegetables Frozen Vegetables	Cover food tightly with plastic wrap, and then make venting holes in the plastic or leave a small portion uncovered. 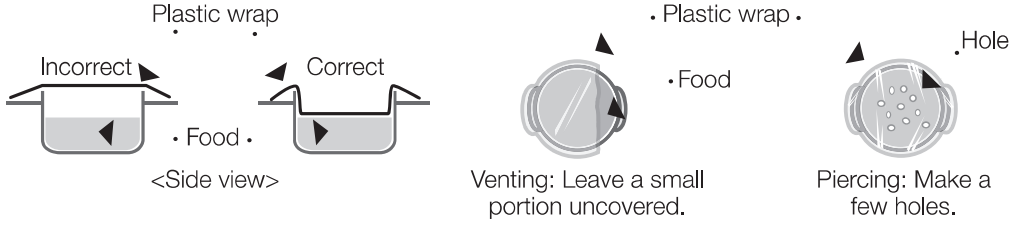
Frozen breakfast Frozen dinner	Follow the guide on food packages.

- You can cook from 1 to 6 whole potatoes. When you cook potatoes, arrange the potatoes as shown in the figures below.

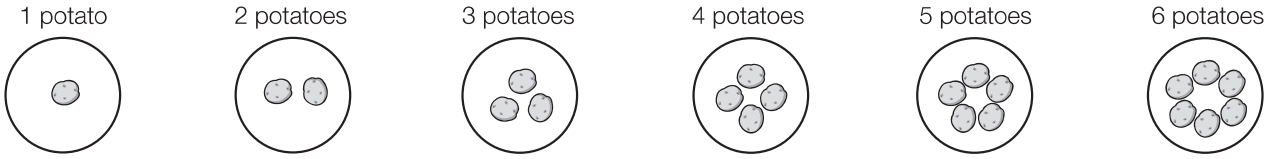

Smart Multi Sensor Cooking table

Food	Amount	Procedure
Popcorn	1.2 - 3.5 oz, 1 package	Heat only one microwave popcorn bag at a time. Unfold the popcorn package so that it lies flat and place it in the center of the turntable. Be careful when removing the heated bag from the oven and opening it. Let the oven cool for at least 5 minutes before using it again.

ME21H706MQS_AA_AC_EN_140630-1.indd 12 2014-06-30 5:42:54

Food		Amount	Procedure
Cook	Beverage (Co-1)	8 oz. 1 cup	Use a measuring cup or mug and do not cover. Place the beverage in the center of turntable. After heating, stir well. Let the oven cool for at least 5 minutes before using it again.
	Chicken breast (Co-2)	8 - 32 oz	Place the chicken breasts in a microwave-safe bowl or dish. Cover with plastic wrap and leave a small opening near the edge of the bowl or dish for ventilation or pierce the plastic in several places. Place the food in the center of the turntable. Cook to an internal temperature of 170 °F. Let stand for 5 minutes.
	Frozen breakfast (Co-3)	4 - 8 oz	Follow the package instructions for covering and letting stand. Place the food in the center of the turntable. Use this button for breakfast entrees, pancakes, waffles, etc. Let the oven cool for at least 5 minutes before using it again.
	Frozen dinner (Co-4)	8 - 16 oz	Follow the instructions on the box for covering and letting stand. Place the food in the center of the turntable. Let the oven cool for at least 5 minutes before using it again.
Veggies	Fresh vegetables (Fr-1)	1 - 4 cups	Place the fresh vegetables in a microwave-safe bowl (ceramic, glass, or plastic) and add 2-4 tbs. water. Cover with plastic wrap and leave a small opening near the edge of the bowl for ventilation or pierce the plastic in several places. Place the food in the center of the turntable. Let the oven cool for at least 5 minutes before using it again.
	Frozen vegetables (Fr-2)	1 - 4 servings	Place the frozen vegetables in a microwave-safe bowl (ceramic, glass, or plastic) and add 2-4 tbs. water. Cover with plastic wrap and leave a small opening near the edge of the bowl for ventilation or pierce the plastic in several places. Place the food in the center of the turntable. Let the oven cool for at least 5 minutes before using it again.
Potato		1 - 6 potatoes	Pierce each potato several times with a fork. Place on the turntable in a spoke-like fashion. After cooking, let the potatoes stand for 3-5 minutes. Let the oven cool for at least 5 minutes before using it again.
Pizza		1 - 4 slices	Place 1-4 pizza slices on a microwave-safe plate with the wide ends of the slices towards the outside edge of the plate. Do not let the slices overlap. Do not cover. Place the plate in the center of the turntable. Let the oven cool for at least 5 minutes before using it again.

Smart Multi Sensor Reheating table

Follow the instructions below when reheating different types of food.

Food	Amount	Procedure
Dinner plate (rh-1)	1 serving (1 plate)	Use only precooked, refrigerated foods. Cover with plastic wrap and leave a small opening near the edge of the dish for ventilation or pierce the plastic in several places. Place the food in the center of the turntable. Let the oven cool for at least 5 minutes before using it again. Contents: 3-4 oz. meat, poultry or fish (up to 6 oz. with bone) ½ cup starch (potatoes, pasta, rice, etc.) ½ cup vegetables (about 3 - 4 oz.)
Casserole (rh-2)	1 - 4 servings	Put the food in a microwave-safe bowl. Cover with plastic wrap and leave a small opening near the edge of the bowl for ventilation or pierce the plastic in several places. Place the food in the center of the turntable. Stir the food once before serving. Let the oven cool for at least 5 minutes before using it again. Contents: Casserole, refrigerated foods. Pasta: canned spaghetti, ravioli
Pasta (rh-3)		

SMART DEFROST BUTTON

To thaw frozen foods, enter the weight of the food, and the microwave automatically sets the defrosting time, power level, and standing time. Press **ENTER/START** button to start defrosting.

1. Press the **Smart Defrost** button.
2. Press the **Smart Defrost** button repeatedly or the number buttons (1-7) to select the menu that corresponds to the food you are defrosting and the weight of the food. For example, selet dF-1 to defrost .5 to .9 lbs of ground meat.
3. Press the **ENTER/START** button.
4. Whenever the microwave beeps during the defrosting process, open the microwave's door, turn the food over, and then press the **ENTER/START** button to continue defrosting.

ME21H706MQS_AA_AC_EN_140630-1.indd 13 2014-06-30 5:42:54

Smart Defrost table

For the best results, do not cover with plastic wrap or a plastic bag.

Menu / item		Amount	Remarks
dF - 1	Ground meat	0.5 - 0.9 lbs.	Place the ground meat in the middle of a flat microwave-safe plate and position the plate in the center of the turntable. Turn the meat over when the oven beeps. After the second beep, the oven will operate continuously. If you are defrosting more than 2 lbs. of ground meat, turn the meat over at the second beep for better result.
dF - 2		1 - 3 lbs.	
dF - 3	Piece of meat	0.5 - 0.9 lbs.	Shield the thinner edges of the meat with aluminum foil. Place the piece of meat in the middle of a flat microwave-safe plate and position the plate in the center of the turntable. Turn the meat over when the oven beeps.
dF - 4		1 - 3 lbs.	
dF - 5	Whole poultry	1.5 - 4.4 lbs.	This program is suitable for whole poultry as well as for poultry pieces. Before defrosting, if there are a lot of ice crystals on the poultry's surface, rinse the poultry under cold water until all the ice crystals are removed. Then, let the poultry stand for 5 to 10 minutes at room temperature. Shield the legs and wing tips with aluminum foil. Place poultry pieces skin-side down, or whole poultry breast-side down, in the middle of a flat microwave-safe plate. Position the plate in the center of the turntable. Turn the poultry over when the oven beeps.
dF - 6	Piece of poultry	1 - 4.4 lbs.	
dF - 7	Fish fillet	0.5 - 3 lbs.	This program is suitable for fish fillets. Shield the thinner edge of the fillet with aluminum foil. Place the fillet in the middle of a flat microwave-safe plate and position the plate in the center of the turntable. Turn the fillet over when the oven beeps.

Check the food when you hear the oven signal. After the final stage, small sections may still be icy. Let the food stand to continue the thawing process. The food is not defrosted until all ice crystals have melted. Shielding the edges of roasts and pieces of steak using small pieces of foil prevents the edges from being cooked before the center of the food has defrosted. Use narrow, flat, smooth strips of aluminum foil to cover edges and thinner sections of the food.

FIT CHOICE BUTTON

1. Press the **Fit Choice** button. Press the button repeatedly to cycle through the available items. (Refer to the Fit Choice table below for a list of the items.)
2. Press the **1**, **2**, **3**, or **4** button to select the amount.
3. Press the **ENTER/START** button to begin cooking.

Fit Choice table

Menu / item		No. / Amount		Remarks
FC-1	Spinach	**1**	1 serving	Wash and clean the spinach. Place the spinach in a microwave safe bowl. Add 1-4 tablespoons of water (1 Tbsp per serving). Cover during cooking and stir afterwards.
		2	2 servings	
		3	3 servings	
		4	4 servings	
FC-2	Squash	**1**	1-2 lbs.	Slice the squash in half and remove the seeds. Place the squash cut side down in a microwave safe dish and cover with the plastic wrap. If needed, add a ¼ cup of water.
		2	2-3 lbs.	
FC-3	Brown rice	**1**	1 serving	Place 0.5 cup brown rice + 1 cup water for 2 servings or 1 cup brown rice + 2 cups water for 4 servings in a microwave safe bowl. Stir well before and fluff with a fork afterwards. Let stand 5 minutes before serving.
		2	2 servings	
FC-4	Oatmeal	**1**	1 package	Follow the package directions for the recommended amount of water needed. Stir well before and afterwards.
		2	2 packages	
FC-5	Quinoa	**1**	1 serving	Follow the package directions for the recommended amount of water needed. When the microwave beeps, stir well, and then restart the microwave.
		2	2 servings	
FC-6	Bone in chicken pieces	**1**	2 servings	Brush the chicken pieces with oil and seasonings. Arrange chicken pieces in dish with meatiest portions toward the outside edge of dish, and then cover with wax paper. Place the dish on the center of the turntable.
		2	4 servings	
FC-7	Fresh fish fillet	**1**	1 serving	Put the fillets (cod, pollack, etc.) in a dish, and then cover with plastic wrap. Place the dish on the center of the turntable.
		2	2 servings	
FC-8	Fresh salmon fillet	**1**	1 serving	Put the salmon fillets in a dish, and then cover with plastic wrap. Place the dish on the center of the turntable.
		2	2 servings	
FC-9	Fresh prawns	**1**	2 servings	Put the prawns in a dish, and then cover with plastic wrap. Place the dish on the center of the turntable.
		2	4 servings	

ME21H706MQS_AA_AC_EN_140630-1.indd 14 2014-06-30 5:42:54

1 POUND DEFROST BUTTON

To thaw 1 lb. of frozen food, press this button, and the microwave automatically sets the defrosting time, power level and standing time.

1. Press the **1 Pound Defrost** button. The display shows: *1.0 Lbs*
2. Press the **ENTER/START** button to start defrosting.
3. The oven will beep during the defrosting process. Open the oven door, turn the food over, and the press the **ENTER/START** button.
4. If you do not turn the food over, the oven will pause until you press the **ENTER/START** button.

SOFTEN/MELT BUTTON

1. Press the **Soften/Melt** button. Press the button repeatedly to cycle through the available items. (Refer to the Soften/Melt table below for a list of the items.)
2. Press the number **1** or **2** button to select the amount. You can cook only 1 serving using the Melt Chocolate, Soften Butter, and Soften Cream Cheese options. (Refer to the Soften/Melt table for the serving size.)
3. Press the **ENTER/START** button to begin cooking.

Soften / Melt table

Menu / item		No. / Amount		Remarks
St-1	Melt butter	**1**	1 stick (serving)	Remove the wrapping and cut the butter in half vertically. Place the butter in a dish and cover with wax paper. Stir well after finishing and let stand for 1-2 minutes.
		2	2 sticks (serving)	
St-2	Melt chocolate	**1**	1 cup chips or 1 square	Place the chocolate chips or squares in a microwave-safe container. When the oven beeps, stir the chocolate and restart the oven. Stir and let stand for 1 minute.
St-3	Soften butter	**1**	1 stick (1/4 lbs.)	Remove wrapping and cut butter in half vertically. Place butter in dish, cover with wax paper.
St-4	Soften cream cheese	**1**	1 package (8-oz)	Unwrap the cream cheese and place on a microwave-safe container. Cut in half vertically. Let stand for 2 minutes.

KIDS MEALS BUTTON

1. Press the **Kids Meals** button. Press the button repeatedly to cycle through the available items. (Refer to the Kids meals table below for a list of the items.)
2. Press the number **1** or **2** button to select the amount. (Refer to the Kids meals table for the serving size.)
3. Press the **ENTER/START** button to begin cooking.

Kids meals table

Menu / item		No. / Amount		Remarks
CH-1	Chicken nuggets (frozen)	**1**	1 serving	Place a paper towel on a plate and arrange the nuggets in a spoke-like fashion on the paper towel. Do not cover. Let stand for 1 minute after heating.
		2	2 servings	Refer to the package directions for the serving size and the amount of food.
CH-2	French fries (frozen)	**1**	1 serving	Place two paper towels on a microwave-safe plate and arrange the French fries on the towels without letting them overlap. Blot the fries with additional paper towels after removing from the oven. Let stand for 1 minute.
		2	2 servings	Refer to the directions on the packaging for the serving size and the amount of food.
CH-3	Frozen sandwiches (in crisping sleeve) 9-oz package size	**1**	1 sandwich	Place the frozen sandwich in a susceptor “crisping sleeve” (which is in the package) and place on a microwave-safe plate. Remove from the “crisping sleeve”. Let stand for 2 minutes after heating.
		2	2 sandwiches	
CH-4	Hot dogs	**1**	2 hot dogs	Pierce the hot dogs and place them on a plate. When the oven beeps, add the buns and restart the oven. Let stand for 1 minute after heating.
		2	4 hot dogs	For the best texture, the buns should be added to the hot dogs when the oven beeps.

ME21H706MQS_AA_AC_EN_140630-1.indd 15 2014-06-30 5:42:54

SNACKS BUTTON

1. Press the **Snacks** button. Press the button repeatedly to cycle through the available items. (Refer to the Snacks table below for a list of the items.)
2. Press the number **1** or **2** button to select the serving size. You can cook only 1 serving for Nachos. (Refer to the Snacks table for the serving size.)
3. Press the **ENTER/START** button to begin cooking.

Snacks table

Menu / item		No. / Amount		Remarks
Sn-1	Cheese sticks (frozen)	**1**	5-6 pcs	Place the cheese sticks on a plate in a spoke-like fashion. Do not cover. Let stand for 1 to 2 minutes after heating.
		2	7-10 pcs	
Sn-2	Chicken wings	**1**	5-6 oz.	Use precooked, refrigerated chicken wings. Place the chicken wings around the plate in a spoke-like fashion and cover with wax paper. Let stand for 1 to 2 minutes.
		2	7-8 oz.	
Sn-3	Nachos	**1**	1 serving	Place the nachos on a plate without letting them overlap. Sprinkle cheese evenly over them. Contents: 2 cups tortilla chips 1/3 cup grated cheese
Sn-4	Potato skins	**1**	1 cooked potato	Cut the cooked potato into 4 even wedges. Scoop or cut out the potato flesh, leaving about a ¼ in. of skin. Place the skins in a spoke-like fashion around the plate. Sprinkle with bacon, onions and cheese. Do not cover. Let stand 1 to 2 minutes.
		2	2 cooked potatoes	

MICROWAVE COOKING TIMES & POWER LEVELS

Your oven allows you to set two different cooking stages, each with its own time length and power level. The power level lets you control the heating intensity from Warm (1) to High (10).

One-stage cooking

For simple, one-stage cooking, you only need to set the cooking time. The power level is automatically set to High. If you want to set the power level to any other level, use the **Power Level** button.

1. Use the number buttons to set a cooking time. You can enter a time from one second to 99 minutes and 99 seconds. To select a time greater than one minute, enter the seconds too. (For example, to set a cooking time of 20 minutes, enter **2**, **0**, **0**, **0**.)
2. If you want to set the power level to a level other than High, press the **Power Level** button, and then use the number buttons to enter the power level.
3. Press the **ENTER/START** button to begin cooking. If you want to change the power level, press the **STOP/CLEAR** button before you press the **ENTER/START** button, and then enter all the instructions again.

Some recipes require different cooking stages at different temperatures. Your microwave allows you to set multiple cooking stages.

Multi-stage cooking

1. Follow steps 1 and 2 from the “One-stage cooking” section.

When selecting more than one cooking stage, you must press the **Power Level** button before you can enter the second cooking stage.

Press the **Power Level** button twice to set the power level to High for a cooking stage.

2. Use the number buttons to set a second cooking time.
3. Press the **Power Level** button, and then use the number buttons to set the power level for the second cooking stage.
4. Press the **ENTER/START** button to begin cooking.

ME21H706MQS_AA_AC_EN_140630-1.indd 16 2014-06-30 5:42:55

Power Levels

The 10 power levels allow you to choose the optimal power level for your cooking needs.

1	Warm	6	Simmer
2	Low	7	Medium high
3	Defrost	8	Reheat
4	Medium low	9	Sauté
5	Medium	10	High

KEEP WARM

You can keep cooked food warm in your microwave oven for up to 99 minutes 99 seconds.

1. Press the **Keep Warm** button.
2. Enter the warming time.
3. Press the **ENTER/START** button.

Keep Warm operates for up to 99 minutes 99 seconds.

Food that is cooked covered should also be covered during **Keep Warm**.

Pastry items (pies, turnovers, etc.) should be uncovered during **Keep Warm**.

Complete meals kept warm on a dinner plate can be covered during **Keep Warm**.

Below are the amounts of food we recommend you apply the Warm and Hold function to by Food Type.

Food type	Recommended Quantity
Liquid	1-2 cups
Dry	5-10 oz.

FAVORITE COOK BUTTON

The **Favorite Cook** button lets you store a customized set of cooking instructions, and recall this setting later from the microwave's memory to begin cooking quickly.

Only one set of instructions can be stored at a time.

1. Press the **Favorite Cook** button.
2. Use the number buttons to enter the cooking time. The display will show the set time.
3. Press the **Power Level** button and use the number buttons to enter the power level. The display will show the selected power level. You can set the power level from 0 to 9. If you do not set the **Power Level**, the oven sets itself to the highest level automatically.
4. Press the **ENTER/START** button again.
5. To retrieve a Favorite Cook setting, press the **Favorite Cook** button, then press the **ENTER/START** button.

- You can only recall one stored Custom Cook setting at a time.

6. If you want to set a new time and power level, repeat steps 1~5.

You can check the power level anytime while cooking by pressing the **Power Level** button.

cookware guide

For food to cook in the microwave oven, the microwaves must be able to penetrate the food without being reflected or absorbed by the dish.

It is important to choose the correct cookware, therefore, look for cookware that is marked microwave-safe.

The following table lists various types of cookware and indicates if and how they should be used in a microwave oven.

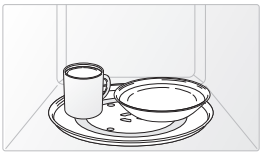

MICROWAVE-SAFE UTENSILS

If you are not sure whether an item is microwave-safe, you can perform the following simple test:

1. Place 1 cup of water (in a glass-measuring cup) inside your oven next to the item to be tested.
2. Press the **Add 30 sec** button twice to heat them both for one minute at high power.

After one minute, the water should be warm and the item you are testing should be cool. If the dish is warm, then it is absorbing microwave energy and is not microwave-safe.

Cookware		Comments
Aluminum foil	△	Can be used in small quantities to protect areas against overcooking. Arcing can occur if the foil is too close to the oven wall or you use too much foil.
Browning plate	✓	Do not preheat for more than eight minutes.
Ceramic, porcelain, and stoneware	✓	Porcelain, pottery, glazed earthenware, and bone china are usually suitable, unless decorated with a metal trim.
Disposable polyester cardboard	✓	Some frozen foods are packaged in these materials.
Fast-food packaging		
Polystyrene cups/ containers	✓	Can be used to warm food. Overheating may cause the polystyrene to melt.
Paper bags or newspaper	—	May catch fire.
Recycled paper or metal trims	—	May cause arcing.

ME21H706MQS_AA_AC_EN_140630-1.indd 17 2014-06-30 5:42:56

Cookware		Comments
Glassware		
Oven-to-table ware	✓	Can be used, unless decorated with a metal trim.
Fine glassware	✓	Can be used to warm foods or liquids. Delicate glass may break or crack if heated suddenly.
Glass jars	✓	Regular glass is too thin to be used in a microwave, and can shatter.
Metal		
Dishes, Utensils	—	May cause arcing or fire.
Freezer bag twist ties	—	May cause arcing or fire.
Paper		
Plates, cups, napkins, and kitchen paper	✓	For short cooking times and warming. Also to absorb excess moisture.
Recycled paper	✓	Do not use recycled paper towels, which may contain metal and may catch fire or cause arcing.
Plastic		
Containers	✓	Can be used if heat-resistant thermoplastic. Some plastics may warp or discolor at high temperatures. Do not use Melamine plastic.
Cling film	✓	Can be used to retain moisture. Avoid wrapping the food too tightly. Take care when removing the film. Hot steam will escape.
Freezer bags	△	Only if boilable or oven-proof. Should not be airtight. Pierce with a fork if necessary.
Wax or grease-proof paper	✓	Can be used to retain moisture and prevent spattering.
Thermometer	✓	Use only those marked “Microwave-safe” and follow the directions. Check the temperature in several places. You can use conventional thermometers once the food has been removed from the oven.
Straw, wicker, and wood	△	Use only for short-term heating, as these materials are flammable.

✓ : Recommended to use

△ : Use with Caution

— : Unsafe to use / Do not use

cooking guide

Microwave energy actually penetrates food, attracted and absorbed by the water, fat, and sugar in the food. The microwaves cause the molecules in the food to move rapidly. The rapid movement of these molecules creates friction and the resulting heat cooks the food.

GENERAL MICROWAVE TIPS

Dense foods, such as potatoes, take longer to heat than lighter foods. Foods with a delicate texture should be heated at a low power level to prevent them from becoming tough.
Foods with a non-porous skin such as potatoes or hot dogs, should be pierced to prevent bursting.
Putting heating oil or fat in the microwave is not recommended. Fat and oil can suddenly boil over and cause severe burns.
Some ingredients heat faster than others. For example, the jelly in a jelly doughnut will be hotter than the dough. Keep this in mind to avoid burns.
The altitude and the type of cookware you are using can affect the cooking time. When trying a new recipe, use the minimum cooking time and check the food occasionally to prevent overcooking.
Home canning in the microwave oven is not recommended because not all harmful bacteria may be destroyed by the microwave heating process.
Although microwaves do not heat the cookware, the heat from the food is often transferred to the cookware. Always use pot holders when removing food from the microwave and instruct children to do the same.
Making candy in the microwave is not recommended as candy can be heated to very high temperatures. Keep this in mind to avoid injury.

Cooking techniques

If the oven is set to cook for more than 20 minutes, it will automatically adjust to 70 percent power after 20 minutes to avoid overcooking.

Stirring

Open the microwave door and stir foods such as casseroles and vegetables occasionally while cooking to distribute heat evenly. Food at the outside of the dish absorbs more energy and heats more quickly, so stir from the outside towards the center. The oven will turn off when you open the door to stir your food.

Arrangement

Arrange unevenly shaped foods, such as chicken pieces or chops, with the thicker, meatier parts toward the outside of the turntable where they can receive more microwave energy. To prevent overcooking, place thin or delicate parts towards the center of the turntable.

Shielding

Shield food with narrow strips of aluminum foil to prevent overcooking. Areas that need shielding include poultry wing-tips, the ends of poultry legs, and corners of square baking dishes. Use only small amounts of aluminum foil. Larger amounts can damage your oven.

ME21H706MQS_AA_AC_EN_140630-1.indd 18 2014-06-30 5:42:56

Turning
Turn foods over midway through the cooking cycle to expose all parts to the microwave energy. This is especially important with large items such as roasts.

Standing
Foods cooked in the microwave build up internal heat and continue to cook for a few minutes after the oven stops. Let foods stand to complete the cooking process, especially foods such as roasts and whole vegetables. Roasts need this time to complete cooking in the center without overcooking the outer areas. All liquids, such as soup or hot chocolate should be shaken or stirred when cooking is complete. Let liquids stand a moment before serving. When heating baby food, stir well and test the temperature before serving.

Adding moisture
Microwave energy is attracted to water molecules. Food that is uneven in moisture content should be covered or allowed to stand so that the heat disperses evenly. Add a small amount of water to dry food to help it cook.

Venting
After covering a dish with plastic wrap, vent the plastic wrap by turning back one corner to let excess steam escape.

COOKING MEAT
Place the meat fat side down on a microwave-safe roasting rack in a microwave-safe dish. Use narrow strips of aluminum foil to shield any bone tips or thin pieces of meat. Check the temperature in several places before letting the meat stand the recommended time.
The following temperatures are the removal temperatures. The temperature of the food will rise during standing time.

Food	Cooking time/ power level	Instructions
Roast beef (boneless) Up to 4 lbs.	**Cooking Time:** 3-9 min. / lb. for 145 °F - Rare 10-15 min. / lb. for 160 °F - Medium 12-17 min. / lb. for 170 °F - Well Done	Place the roast fat-side down on the roasting rack and cover with wax paper. Turn over halfway through the cooking process. Let stand for 10 to 15 minutes.
	Power Level: High (10) for first 5 minutes, then Medium (5).	
Pork (boneless or bone-in) Up to 4 lbs.	**Cooking Time:** 13-17 min. / lb. at 170 °F Well Done	Place the pork fat-side down on the roasting rack and cover with wax paper. Turn over halfway through cooking process. Let stand for 10 to 15 minutes.
	Power Level: High (10) for first 5 minutes, then Medium (5).	

The following temperatures are the removal temperatures. The temperature of the food will rise during standing time. Expect a 10 °F rise in temperature during the standing time.

Food		Remove from oven	After standing (10 MIN.)
Beef	Rare	135 °F	145 °F
	Medium	150 °F	160 °F
	Well Done	160 °F	170 °F
Pork	Medium	150 °F	160 °F
	Well Done	160 °F	170 °F
Poultry	Dark meat	170 °F	180 °F
	Light meat	160 °F	170 °F

COOKING POULTRY
Place the poultry on a microwave-safe roasting rack in a microwave-safe dish and cover with wax paper to prevent spattering. Use aluminum foil to shield the bone tips, thin pieces of meat, or areas that may start to overcook. Check the temperature in several places before letting the poultry stand the recommended time.

Food	Cooking time/ power level	Instructions
Whole chicken Up to 4 lbs.	**Cooking Time:** 7-11 min. / lb. 180 °F dark meat 170 °F light meat	Place the chicken breast-side down on the roasting rack. Cover with wax paper. Turn over half way through cooking process. Cook until the juices run clear and the meat near the bone is no longer pink. Let stand for 5-10 minutes.
	Power Level: Medium High (7).	
Chicken pieces Up to 2 lbs.	**Cooking Time:** 7-10 min. / lb. 180 °F dark meat 170 °F light meat	Place the chicken bone-side down on the dish, with the thickest portions towards the outside of the dish. Cover with wax paper. Turn over halfway through the cooking process. Cook until the juices run clear and the meat near the bone is no longer pink. Let stand for 5-10 minutes.
	Power Level: Medium High (7).	

ME21H706MQS_AA_AC_EN_140630-1.indd 19 2014-06-30 5:42:56

COOKING SEAFOOD

Place the fish on a microwave-safe roasting rack in a microwave-safe dish. Use a tight cover to steam the fish. A lighter cover of wax paper or paper towel will decrease steaming. Cook the fish until it flakes easily with a fork. Do not over cook fish. Check it after the minimum cooking time.

Food	Cooking time/ power level	Instructions
Tuna steaks and salmon steaks Up to 1.5 lbs.	**Cooking Time:** 6-10 min. / lb. **Power Level:** Medium-High (7).	Arrange the steaks on a roasting rack with the meaty portions towards the outside of the rack. Cover with wax paper. Turn them over halfway through the cooking process. Cook until the fish flakes easily with a fork. Let stand for 3-5 minutes.
Fillets Up to 1.5 lbs.	**Cooking Time:** 4-8 min. / lb. **Power Level:** Medium-High (7).	Arrange the fillets in a baking dish, tucking any thin pieces under. Cover with wax paper. If the fillets are thicker than ½ in., turn them over halfway through the cooking process. Cook until the fish flakes easily with a fork. Let stand for 2-3 minutes.
Shrimp Up to 1.5 lbs.	**Cooking Time:** 4-6 min. / lb. **Power Level:** Medium-High (7).	Arrange the shrimp in a baking dish without overlapping or layering them. Cover with wax paper. Cook until firm and opaque, stirring 2 or 3 times. Let stand for 5 minutes.

COOKING EGGS

You can use your microwave oven to cook eggs. Cook them until they are just set as they become tough if they are overcooked.

WARNING Never cook eggs in their shells and never warm up hard-boiled eggs in their shells. Eggs cooked or warmed up in their shells can explode. Always pierce whole eggs to keep them from bursting.

COOKING VEGETABLES

Vegetables should be washed prior to cooking. Usually, no extra water is needed. When cooking dense vegetables such as potatoes, carrots, and green beans, add about ¼ cup water.
Small vegetables (sliced carrots, peas, lima beans, etc.) will cook faster than larger ones.
Whole vegetables, such as potatoes, acorn squash, or corn on the cob, should be arranged in a circle on the turntable before cooking. They will cook more evenly if turned over halfway through the cooking process.
Always place vegetables such as asparagus and broccoli with the stems pointing towards the edge of the dish and the tips toward the center.
When cooking cut vegetables, always cover the dish with a lid or vented microwavable plastic wrap.
Whole, unpeeled vegetables such as potatoes, squash, eggplant, etc., should have their skins pierced in several spots before cooking to prevent them from bursting.
For a more even cooking result, stir or rearrange whole vegetables halfway through the cook time.
Generally, the denser the food, the longer the standing time. (The standing time refers to the time necessary for dense, large foods and vegetables to finish cooking after they come out of the oven.) A baked potato can stand on the counter for five minutes before cooking is completed, while a dish of peas can be served immediately.

RECIPES

Beef and barley stew

1½ lbs. beef stew cubes, cut into ½-inch pieces
½ cup chopped onion
2 Tbs. all-purpose flour
1 Tbs. Worcestershire sauce
1 can (13.75-14.5 oz.) beef broth
2 medium carrots, cut into ½-inch slices (about 1 cup)
½ cup barley
1 bay leaf
¼ tsp. pepper
1 pkg. (9-10 oz.) frozen peas, thawed

1. In a 2-quart casserole, combine the beef, onion, flour, and Worcestershire sauce and mix well. Cover with lid. Cook at High for 6 to 8 minutes until the beef is no longer pink, stirring once.
2. Stir in beef broth, carrots, barley, bay leaves, and pepper. Cover with lid. Cook at Medium for 1 to 1½ hours until carrots and beef are tender, stirring 2 to 3 times.
3. Stir in peas. Cover with lid. Cook at Medium for 10 minutes. Let stand for 10 minutes. Remove bay leaves before serving.

Makes 6 servings.

Broccoli and cheese casserole

¼ cup butter or margarine
¼ cup chopped onion
1½ Tbs. flour
½ tsp. salt
¼ tsp. dry mustard
⅛ tsp. pepper
1½ cups milk
¼ cup chopped red pepper
8 oz. (2 cups) cheddar cheese, shredded
1 pkg. (9-10 oz.) frozen chopped broccoli, thawed
4 cups cooked spiral shaped pasta (8 oz. dry)

1. In a 2-quart casserole, cook butter and onion at High for 1 to 2 minutes until the onion is soft, stirring once.
2. Add flour, salt, mustard, and pepper; mix well. Cook at High for 30 to 60 seconds until mixture boils. Stir in milk until smooth.
3. Stir in red pepper. Cook at High for 2 to 3 minutes until mixture boils and thickens slightly, stirring twice. Stir in cheese until melted.
4. Add broccoli and pasta. Mix well. Cover with lid. Cook at High for 4 to 6 minutes until heated through, stirring once. Stir before serving.

Makes 6 servings.

ME21H706MQS_AA_AC_EN_140630-1.indd 20 2014-06-30 5:42:56

Warm potato salad

2 lbs. small red potatoes, cut into ½-inch pieces
4 slices bacon (uncooked), cut into ½-inch pieces
¼ cup chopped onion
2 tsp. sugar
1 tsp. salt
1 tsp. flour
½ tsp. celery seed
⅛ tsp. pepper
2½ Tbs. apple cider vinegar

1. In a 2-quart casserole, combine the potatoes and ¼ cup water. Cover with lid. Cook at High until the potatoes are tender (7-10 minutes); stir twice. Drain and set aside to cool slightly.
2. In a medium bowl, cook the bacon at High until crisp (2½-3½ minutes); stir once. Place the bacon on a paper towel. Reserve 1 Tbs. drippings.
3. Combine the drippings and onion. Cover with plastic wrap; turn a corner back to vent steam. Cook at High until tender (1½-2½ minutes); stir once.
4. Stir in sugar, salt, flour, celery seed, and pepper. Cook at High until mixture boils (30-40 seconds). Stir in vinegar and ½ cup water. Cook at High until liquid boils and thickens slightly (1-2 minutes); stir once. Add bacon to dressing. Pour dressing over potatoes. Stir well.

Makes 6 servings.

Black bean soup

1 cup chopped onion
1 clove garlic, minced
2 cans (15 oz. each) black beans, drained
1 can (14-16 oz.) stewed tomatoes, chopped
1 can (13.75-14.5 oz.) chicken broth
1 can (7-8.5 oz.) corn
1 can (4 oz.) chopped green chilies
1-2 tsp. ground cumin

1. Place the onion and garlic in a 3-quart casserole. Cover with lid. Cook at High for 2 to 4 minutes until tender.
2. Add one can of beans, and mash the beans with a fork. Add remaining ingredients and mix well.
3. Cook uncovered at High for 10 minutes; stir. Reduce power to Medium and cook for 5 minutes. Stir before serving.

Makes about 2 quarts.

cleaning and maintaining your microwave oven

Keeping your microwave oven clean improves its performance, wards off unnecessary repairs, and lengthens its life.

CLEANING THE EXTERIOR

It's best to clean spills on the outside of your microwave oven as they occur. Use a soft cloth and warm, soapy water. Rinse and dry.

CAUTION Do not get water into the vents. Never use abrasive products or chemical solvents such as ammonia or alcohol as they can damage the appearance of your microwave.

Cleaning under your microwave oven

Regularly clean grease and dust from the bottom of your microwave using a solution of warm water and detergent.

Cleaning the control panel

Wipe with a damp cloth and dry thoroughly. Do not use cleaning sprays, large amounts of soap and water, abrasives, or sharp objects on the panel as it is easily damaged.

Cleaning the door and door seals

Always ensure that the door seals are clean and that the door closes properly. Take particular care when cleaning the door seals to ensure that no particles accumulate and prevent the door from closing correctly. Wash the glass door with very mild soap and water. Be sure to use a soft cloth to avoid scratching.

If a thin film of water accumulates on the inside or outside of the oven door, wipe it off with a soft cloth. A thin water film can accumulate when you operate the oven at high humidity and in no way indicates microwave leakage.

CLEANING THE INTERIOR

CAUTION Ensure that the microwave oven has cooled down before cleaning it to avoid injury.

CAUTION Remove the glass tray from the oven when cleaning the oven or tray. To prevent the tray from breaking, handle it with care and do not put it in water immediately after cooking. Wash the tray carefully in warm sudsy water or in the dishwasher.

Clean the interior surfaces (oven cavity) of your microwave oven periodically to remove any splashes or stains. To remove hardened food articles and remove smells, place 2 cups of water (add lemon juice for extra freshness) into a four-cup measuring glass. Run the microwave at High power for 5 minutes or until the water boils. Let water stand in the oven for one or two minutes.

ME21H706MQS_AA_AC_EN_140630-1.indd 21 2014-06-30 5:42:57

CLEANING THE TURNTABLE AND ROLLER RINGS

Clean the roller rings periodically and wash the turntable as required. You can wash the turntable safely in your dishwasher.

STORING AND REPAIRING YOUR MICROWAVE OVEN

If you need to store your microwave oven for a short or extended period of time, choose a dust-free, dry location. Dust and dampness may adversely affect the ability of the microwave parts.

WARNING

- Do not repair, replace, or service any part of your microwave oven yourself. Allow only a qualified service technician to perform repairs. If the oven is faulty and needs servicing, or you are in doubt about its condition, unplug the oven from the power outlet and contact your nearest service center.
- Do not use the oven if it is damaged, in particular, if the door or door seals are damaged. Door damage includes a broken hinge, a worn out seal, or a distorted/bent casing.
- Do not remove the oven from its casing.
- This microwave oven is for home use only and is not intended for commercial use.

REPLACING THE COOKTOP/NIGHT LIGHT

When replacing the cooktop/night light, make sure that you are wearing gloves to avoid injury from the heat of the bulb.

1. Unplug the oven or turn off the power at the main power supply.
2. Remove the screw from the light cover and lower the cover.
3. Replace the bulb with a 20 watt halogen lamp.
4. Replace the light cover and mounting screw.
5. Turn the power back on at the main power supply.

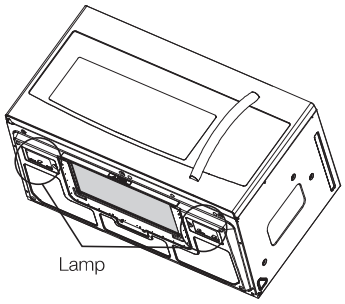

REPLACING THE OVEN LIGHT

When replacing the oven light, make sure that you are wearing gloves to avoid injury from the heat of the bulb.

1. Unplug the oven or turn off the power at the main power supply.
2. Open the door.
3. Remove the vent cover mounting screws (2 middle screws).
4. Slide the vent grille to the left, then pull it straight out.
5. Remove the charcoal filter, if present.
6. Remove the cover by pushing the hook and pulling up the lever.
7. Remove the bulb by turning it gently.
8. Replace the bulb with a 40 watt appliance bulb.
9. Replace the bulb holder.
10. Replace the vent grille and the 2 screws.
11. Turn the power back on.

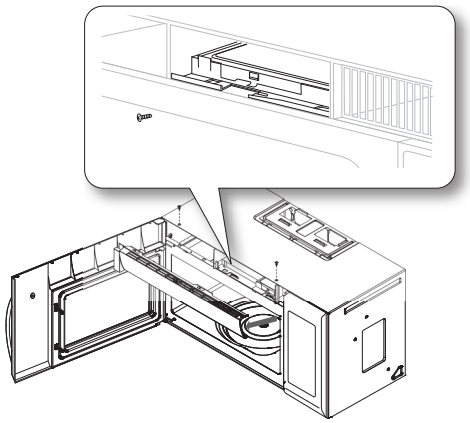

CLEANING THE GREASE FILTER

Your microwave oven has reusable grease filter. The grease filters should be removed and cleaned at least once every four month, or as required.
To order a new grease filter, contact the Parts Department at 1-800-627-4368 or your Samsung dealer. You can also order online at www.samsungparts.com

Your microwave oven has a filter reminder function. See page 10 for details.

WARNING To avoid risk of personal injury or property damage, do not operate the oven hood without the filters in place.

1. To remove the filter, push the front of the grease filter case.

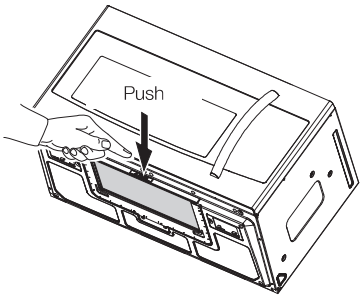

2. Pull the filter case out of the microwave oven.

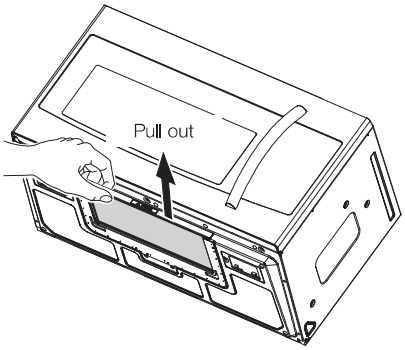

ME21H706MQS_AA_AC_EN_140630-1.indd 22 2014-06-30 5:43:05

3. Remove the filter from the filter case by widening the case, as shown below. Then, soak the grease filter in hot water mixed with a mild detergent. Rinse well and shake to dry. If necessary, brush the filter lightly to remove embedded dirt. When the filter is dry, put it back in the filter case.

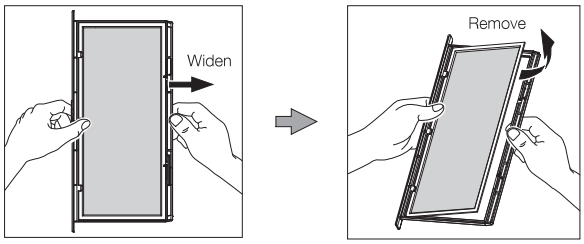

WARNING Do not use ammonia or put the grease filter in the microwave oven. The aluminum will darken.

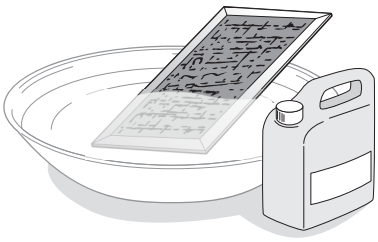

4. To re-install the filter, slide the filter case into the frame slot, and then push it inside.

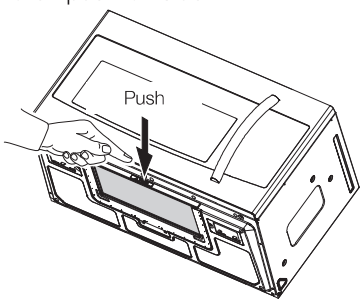

REPLACING THE CHARCOAL FILTER

If your oven is vented to the inside, the charcoal filter should be replaced every 6 to 12 months and more often if necessary. The charcoal filter cannot be cleaned. To order a new charcoal filter, contact the Parts Department at 1-800-627-4368 or your Samsung dealer. You can also order online at www.samsungparts.com

1. Unplug the oven or turn off the power at the main power supply.
2. Open the door.
3. Remove the vent grille mounting screws (2 middle screws).
4. Slide the vent grille to the left, then pull it straight out.
5. Push the hook and remove the old filter.

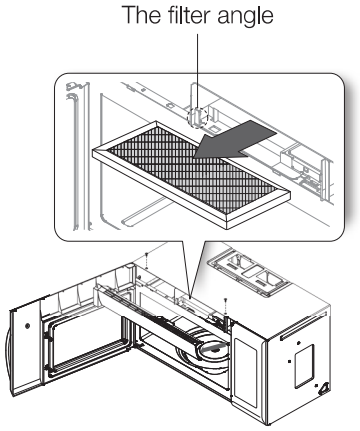

6. Slide a new charcoal filter into place. The filter should rest at the angle shown.
7. Replace the vent grille and 2 screws and close the door. Turn the power back on and set the clock.

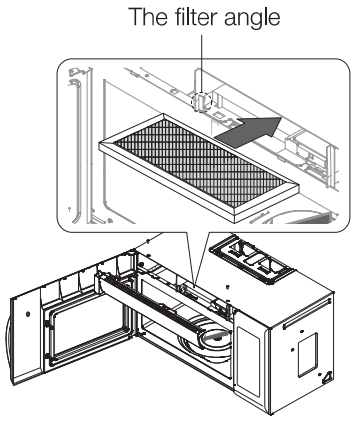

ME21H706MQS_AA_AC_EN_140630-1.indd 23 2014-06-30 5:43:22

troubleshooting

Check these solutions if you have a problem with your microwave:

Problem	Solution
The display and/or the oven is not working.	Make sure the plug is properly connected to a grounded outlet. If the wall outlet is controlled by a wall switch, make sure the wall switch is turned on. Remove the plug from the outlet, wait ten seconds, and plug it in again. Reset the circuit breaker or replace any blown fuses. Plug a different appliance into the outlet. If the other appliance doesn't work, call a qualified electrician to repair the wall outlet. Plug the oven into a different outlet.
The display is working, but the power won't come on.	Make sure the door is closed securely. Check if any packaging material or anything else is stuck in the door seal. Check if the door is damaged. Touch Cancel twice and enter all the cooking instructions again.
Is the power going off before the set time has elapsed?	If there was a power outage, the time indicator will display: *88:88*. If no power outage occurred, remove the plug from the outlet, wait ten seconds, and plug it in again. Reset the clock and any cooking instructions. Reset the circuit breaker or replace any blown fuses.
Cooks food too slowly.	Make sure the oven has its own 20 amp circuit line. Operating another appliance on the same circuit can cause a voltage drop. If necessary, move the oven to its own circuit.
Has sparks or arcing.	Remove any metallic utensils, cookware, or metal ties. If using foil, use only narrow strips and allow at least one inch between the foil and the interior oven walls.
The turntable makes noise or becomes stuck.	Clean the turntable, roller ring, and oven floor. Make sure the turntable and roller ring are positioned correctly.
Causes TV or radio interference.	This is similar to interference caused by other small appliances, such as hair dryers. Move your microwave (or appliance) away from appliances, such as your TV or radio.
Vent Motor suction force is too weak.	Set the vent mode to high. The Vent Fan will only operate in low speed mode while the microwave is working.
Operating noise is too loud.	The MWO makes noise during operation. This is normal. If you hear an abnormal sound continuously, please contact the Samsung Call Center (1-800-726-7864).
Cook top lamp is too dim.	Set the lamp brightness level to high.
Difficult to replace Charcoal Filter.	Please refer to the instructions for replacing the charcoal filter in the user's manual.
Turntable rotates improperly.	Make sure you have not put too much food on the turntable. If the food is too large or too heavy, the turntable may operate improperly.

appendix

Specifications

Model number	ME21H706MQS,B,W/AA	
Oven Cavity : 2.1 cu ft	**Timer :** 99 minutes, 99 seconds	**Controls :** 10 power levels, including defrost
Power Source : 120 VAC, 60 Hz	**Power Output :** 1000 Watts	**Power Consumption :** 1700 Watts
Net/Shipping Weight	STS : 59.2 lbs / 65.9 lbs B / W : 58 lbs / 64.7 lbs	
Outside Dimensions	29 $^{7}/_{8}$"(W) X 16 $^{15}/_{16}$"(H) X 18 $^{5}/_{32}$"(D)	
Oven Cavity Dimensions	22 $^{1}/_{8}$"(W) X 10 $^{13}/_{16}$"(H) X 14 $^{27}/_{32}$"(D)	
Shipping Dimensions	33 $^{3}/_{8}$"(W) X 20 $^{3}/_{4}$"(H) X 19 $^{13}/_{32}$"(D)	
Model number	ME21H706MQS,B,W/AC	
Oven Cavity : 2.1 cu ft	**Timer :** 99 minutes, 99 seconds	**Controls :** 10 power levels, including defrost
Power Source : 120 VAC, 60 Hz	**Power Output :** 950 Watts	**Power Consumption :** 1500 Watts
Net/Shipping Weight	STS : 59.2 lbs / 65.9 lbs B / W : 58 lbs / 64.7 lbs	
Outside Dimensions	29 $^{7}/_{8}$"(W) X 16 $^{15}/_{16}$"(H) X 18 $^{5}/_{32}$"(D)	
Oven Cavity Dimensions	22 $^{1}/_{8}$"(W) X 10 $^{13}/_{16}$"(H) X 14 $^{27}/_{32}$"(D)	
Shipping Dimensions	33 $^{3}/_{8}$"(W) X 20 $^{3}/_{4}$"(H) X 19 $^{13}/_{32}$"(D)	

ME21H706MQS_AA_AC_EN_140630-1.indd 24 2014-06-30 5:43:23

warranty (USA)

SAMSUNG OVER-THE-RANGE (OTR) MICROWAVE OVEN

Limited warranty to original purchaser

This SAMSUNG brand product, as supplied and distributed by Samsung Electronics America, Inc. (SAMSUNG) and delivered new, in the original carton to the original consumer purchaser, is warranted by SAMSUNG against manufacturing defects in materials and workmanship for a limited warranty period of:

ONE (1) YEAR PARTS AND LABOR, TEN (10) YEARS PARTS WARRANTY FOR MAGNETRON

Samsung will charge a repair fee for replacing an accessory or repairing a cosmetic defect if the damage to the unit and/or damage to or loss of the accessory was caused by the customer. Items this stipulation covers include:

- A Dented, Scratched, or Broken Door, Handle, Out-Panel, or Control Panel
- A Broken or missing Tray, Guide Roller, Coupler, Filter, or Wire Rack

User Replaceable Parts may be sent to the customer for unit repair. If necessary, a Service Engineer can be dispatched to perform service.

This limited warranty begins on the original date of purchase, and is valid only on products purchased and used in the United States. To receive warranty service, the purchaser must contact SAMSUNG for problem determination and service procedures. Warranty service can only be performed by a SAMSUNG authorized service center. The original dated bill of sale must be presented upon request as proof of purchase to SAMSUNG or SAMSUNG's authorized service center.

SAMSUNG will repair or replace this product, at our option and at no charge as stipulated herein, with new or reconditioned parts or products if found to be defective during the limited warranty period specified above. All replaced parts and products become the property of SAMSUNG and must be returned to SAMSUNG. Replacement parts and products assume the remaining original warranty, or ninety (90) days, whichever is longer.

In-home service will be provided during the warranty labor period subject to availability within the contiguous United States. In-home service is not available in all areas. To receive in-home service, the product must be unobstructed and accessible to service personnel. If during in-home service repair can not be completed, it may be necessary to remove, repair and return the product. If in-home service is unavailable, SAMSUNG may elect, at our option, to provide for transportation of our choice to and from a SAMSUNG authorized service center. Otherwise, transportation to and from the SAMSUNG authorized service center is the responsibility of the purchaser.

This limited warranty covers manufacturing defects in materials and workmanship encountered in normal, noncommercial use of this product and shall not apply to the following, including, but not limited to: damage which occurs in shipment; delivery and installation; applications and uses for which this product was not intended; altered product or serial numbers; cosmetic damage or exterior finish; accidents, abuse, neglect, fire, water, lightning or other acts of nature; use of products, equipment, systems, utilities, services, parts, supplies, accessories, applications, installations, repairs, external wiring or connectors not supplied or authorized by SAMSUNG which damage this product or result in service problems; incorrect electrical line voltage, fluctuations and surges; customer adjustments and failure to follow operating instructions, cleaning, maintenance and environmental instructions that are covered and prescribed in the instruction book; problems caused by pest infestations, and overheating or overcooking by user; glass tray or turntable; reduced magnetron power output related to normal aging. SAMSUNG does not warrant uninterrupted or error-free operation of the product.

THERE ARE NO EXPRESS WARRANTIES OTHER THAN THOSE LISTED AND DESCRIBED ABOVE, AND NO WARRANTIES WHETHER EXPRESS OR IMPLIED, INCLUDING, BUT NOT LIMITED TO, ANY IMPLIED WARRANTIES OF MERCHANTABILITY OR FITNESS FOR A PARTICULAR PURPOSE, SHALL APPLY AFTER THE EXPRESS WARRANTY PERIODS STATED ABOVE, AND NO OTHER EXPRESS WARRANTY OR GUARANTY GIVEN BY ANY PERSON, FIRM OR CORPORATION WITH RESPECT TO THIS PRODUCT SHALL BE BINDING ON SAMSUNG. SAMSUNG SHALL NOT BE LIABLE FOR LOSS OF REVENUE OR PROFITS, FAILURE TO REALIZE SAVINGS OR OTHER BENEFITS, OR ANY OTHER SPECIAL, INCIDENTAL OR CONSEQUENTIAL DAMAGES CAUSED BY THE USE, MISUSE OR INABILITY TO USE THIS PRODUCT, REGARDLESS OF THE LEGAL THEORY ON WHICH THE CLAIM IS BASED, AND EVEN IF SAMSUNG HAS BEEN ADVISED OF THE POSSIBILITY OF SUCH DAMAGES. NOR SHALL RECOVERY OF ANY KIND AGAINST SAMSUNG BE GREATER IN AMOUNT THAN THE PURCHASE PRICE OF THE PRODUCT SOLD BY SAMSUNG AND CAUSING THE ALLEGED DAMAGE. WITHOUT LIMITING THE FOREGOING, PURCHASER ASSUMES ALL RISK AND LIABILITY FOR LOSS, DAMAGE OR INJURY TO PURCHASER AND PURCHASER'S PROPERTY AND TO OTHERS AND THEIR PROPERTY ARISING OUT OF THE USE, MISUSE OR INABILITY TO USE THIS PRODUCT SOLD BY SAMSUNG NOT CAUSED DIRECTLY BY THE NEGLIGENCE OF SAMSUNG. THIS LIMITED WARRANTY SHALL NOT EXTEND TO ANYONE OTHER THAN THE ORIGINAL PURCHASER OF THIS PRODUCT, IS NONTRANSFERABLE AND STATES YOUR EXCLUSIVE REMEDY.

Some provinces or territories may or may not allow limitations on how long an implied warranty lasts, or the exclusion or limitation of incidental or consequential damages, so the above limitations or exclusions may not apply to you. This warranty gives you specific legal rights, and you may also have other rights which vary from state to state.

To obtain warranty service, please contact SAMSUNG at:

1-800-SAMSUNG (726-7864) or www.samsung.com/us/support

ME21H706MQS_AA_AC_EN_140630-1.indd 25 2014-06-30 5:43:23

warranty (Canada)

SAMSUNG OVER-THE-RANGE (OTR) MICROWAVE OVEN

Limited warranty to original purchaser

This SAMSUNG brand product, as supplied and distributed by Samsung Electronics Canada, Inc. (SAMSUNG) and delivered new, in the original carton to the original consumer purchaser, is warranted by SAMSUNG against manufacturing defects in materials and workmanship for a limited warranty period of:

ONE (1) YEAR PARTS AND LABOR, FIVE (5) YEARS PARTS WARRANTY FOR MAGNETRON

Samsung will charge a repair fee for replacing an accessory or repairing a cosmetic defect if the damage to the unit and/or damage to or loss of the accessory was caused by the customer. Items this stipulation covers include:

- A Dented, Scratched, or Broken Door, Handle, Out-Panel, or Control Panel
- A Broken or missing Tray, Guide Roller, Coupler, Filter, or Wire Rack

User Replaceable Parts may be sent to the customer for unit repair. If necessary, a Service Engineer can be dispatched to perform service.

This limited warranty begins on the original date of purchase, and is valid only on products purchased and used in the Canada. To receive warranty service, the purchaser must contact SAMSUNG for problem determination and service procedures. Warranty service can only be performed by a SAMSUNG authorized service center. The original dated bill of sale must be presented upon request as proof of purchase to SAMSUNG or SAMSUNG's authorized service center.

SAMSUNG will repair or replace this product, at our option and at no charge as stipulated herein, with new or reconditioned parts or products if found to be defective during the limited warranty period specified above. All replaced parts and products become the property of SAMSUNG and must be returned to SAMSUNG. Replacement parts and products assume the remaining original warranty, or ninety (90) days, whichever is longer.

In-home service will be provided during the warranty labor period subject to availability within the contiguous Canada. In-home service is not available in all areas. To receive in-home service, the product must be unobstructed and accessible to service personnel. If during in-home service repair can not be completed, it may be necessary to remove, repair and return the product. If in-home service is unavailable, SAMSUNG may elect, at our option, to provide for transportation of our choice to and from a SAMSUNG authorized service center. Otherwise, transportation to and from the SAMSUNG authorized service center is the responsibility of the purchaser.

This limited warranty covers manufacturing defects in materials and workmanship encountered in normal, noncommercial use of this product and shall not apply to the following, including, but not limited to: damage which occurs in shipment; delivery and installation; applications and uses for which this product was not intended; altered product or serial numbers; cosmetic damage or exterior finish; accidents, abuse, neglect, fire, water, lightning or other acts of nature; use of products, equipment, systems, utilities, services, parts, supplies, accessories, applications, installations, repairs, external wiring or connectors not supplied or authorized by SAMSUNG which damage this product or result in service problems; incorrect electrical line voltage, fluctuations and surges; customer adjustments and failure to follow operating instructions, cleaning, maintenance and environmental instructions that are covered and prescribed in the instruction book; problems caused by pest infestations, and overheating or overcooking by user; glass tray or turntable; reduced magnetron power output related to normal aging. SAMSUNG does not warrant uninterrupted or error-free operation of the product.

THERE ARE NO EXPRESS WARRANTIES OTHER THAN THOSE LISTED AND DESCRIBED ABOVE, AND NO WARRANTIES WHETHER EXPRESS OR IMPLIED, INCLUDING, BUT NOT LIMITED TO, ANY IMPLIED WARRANTIES OF MERCHANTABILITY OR FITNESS FOR A PARTICULAR PURPOSE, SHALL APPLY AFTER THE EXPRESS WARRANTY PERIODS STATED ABOVE, AND NO OTHER EXPRESS WARRANTY OR GUARANTY GIVEN BY ANY PERSON, FIRM OR CORPORATION WITH RESPECT TO THIS PRODUCT SHALL BE BINDING ON SAMSUNG. SAMSUNG SHALL NOT BE LIABLE FOR LOSS OF REVENUE OR PROFITS, FAILURE TO REALIZE SAVINGS OR OTHER BENEFITS, OR ANY OTHER SPECIAL, INCIDENTAL OR CONSEQUENTIAL DAMAGES CAUSED BY THE USE, MISUSE OR INABILITY TO USE THIS PRODUCT, REGARDLESS OF THE LEGAL THEORY ON WHICH THE CLAIM IS BASED, AND EVEN IF SAMSUNG HAS BEEN ADVISED OF THE POSSIBILITY OF SUCH DAMAGES. NOR SHALL RECOVERY OF ANY KIND AGAINST SAMSUNG BE GREATER IN AMOUNT THAN THE PURCHASE PRICE OF THE PRODUCT SOLD BY SAMSUNG AND CAUSING THE ALLEGED DAMAGE. WITHOUT LIMITING THE FOREGOING, PURCHASER ASSUMES ALL RISK AND LIABILITY FOR LOSS, DAMAGE OR INJURY TO PURCHASER AND PURCHASER'S PROPERTY AND TO OTHERS AND THEIR PROPERTY ARISING OUT OF THE USE, MISUSE OR INABILITY TO USE THIS PRODUCT SOLD BY SAMSUNG NOT CAUSED DIRECTLY BY THE NEGLIGENCE OF SAMSUNG. THIS LIMITED WARRANTY SHALL NOT EXTEND TO ANYONE OTHER THAN THE ORIGINAL PURCHASER OF THIS PRODUCT, IS NONTRANSFERABLE AND STATES YOUR EXCLUSIVE REMEDY.

Some provinces or territories may or may not allow limitations on how long an implied warranty lasts, or the exclusion or limitation of incidental or consequential damages, so the above limitations or exclusions may not apply to you. This warranty gives you specific legal rights, and you may also have other rights which vary from state to state.

To obtain warranty service, please contact SAMSUNG at:

1-800-SAMSUNG (726-7864) or www.samsung.com/ca/support, www.samsung.com/ca_fr/support

ME21H706MQS_AA_AC_EN_140630-1.indd 26 2014-06-30 5:43:23

memo

memo

SAMSUNG

Scan this with your smartphone

Scan the QR code* or visit
www.samsung.com/spsn
to view our helpful
How-to Videos and Live Shows

*Requires reader to be installed on your smartphone

Please be advised that the Samsung warranty does NOT cover service calls to explain product operation, correct improper installation, or perform normal cleaning or maintenance.

QUESTIONS OR COMMENTS

COUNTRY	CALL	OR VISIT US ONLINE AT
CANADA	1-800-SAMSUNG (726-7864)	www.samsung.com/ca/support (English) www.samsung.com/ca_fr/support (French)
U.S.A Consumer Electronics	1-800-SAMSUNG (726-7864)	www.samsung.com/us/support
U.S.A Mobile Phones	1-800-SAMSUNG (726-7864)	www.samsung.com/us/support