dacor
The Life of the Kitchen.®

Use and Care Manual

Renaissance® Wall Oven

For use with RO series models

Style varies,
model RO230S shown

Table of Contents

Important Safety Instructions 1
Getting to Know Your Oven 3
Operating Your Oven 8
Cooking Tips 21
Care and Cleaning 24
Part and Accessories 29
Before You Call for Service 30
Warranty and Service 32
Warranty Card ..... Back Cover

Family Owned
American Made

Part No. 105488 Rev. F

dacor®
The Life of the Kitchen.®

To Our Valued Customer:

Congratulations on your purchase of the very latest in Dacor® products! Our unique combination of features, style and performance make us The Life of the Kitchen™, and a great addition to your home.

In order to familiarize yourself with the controls, functions and full potential of your new Distinctive Appliance, read this use and care manual thoroughly, beginning with the ***Important Safety Instructions*** section.

All Dacor appliances are designed and manufactured with quality and pride, while working within the framework of our company value. Should you ever experience a problem with your product, please first check the ***Before You Call for Service*** section of this manual for guidance. It provides useful suggestions and remedies prior to calling for service.

Valuable customer input helps us to continuously improve our products and services, so please feel free to contact our Customer Service Team for assistance with any of your product support needs.

Dacor Customer Service Team
14425 Clark Avenue
City of Industry, CA 91745

Telephone: (800) 793-0093
Fax: (626) 403-3130
Hours of Operation: Monday through Friday
6:00 A.M. to 5:00 P.M. Pacific Time

Web Site: www.dacor.com

Thank you for choosing Dacor for your home. We are a company built by families for families and we are dedicated to serving yours. We are confident that your new Dacor product will deliver a high level of performance and enjoyment for many years to come.

Sincerely,

The Dacor Customer Service Team

© 2011 Dacor, all rights reserved.

Important Safety Instructions

INSTALLER: LEAVE THESE INSTRUCTIONS WITH THE APPLIANCE.

CUSTOMER: READ THIS USE AND CARE MANUAL COMPLETELY BEFORE USING THIS APPLIANCE. SAVE IT FOR FUTURE REFERENCE.

For service and warranty information see page 31.

If you have any questions, call:

Dacor Customer Service
(800) 793-0093 (U.S.A. and Canada)
Monday — Friday 6:00 A.M. to 5:00 P.M. Pacific Time

Web site: www.dacor.com

Have the complete model and serial number for your appliance available. The numbers are found on the appliance data plate, located inside the grill, below the control panel. Open the door to expose the grill. On double ovens, the plate is located behind the top grill. Write these numbers below for future reference.

Model number _____

Serial number _____

Date of purchase _____

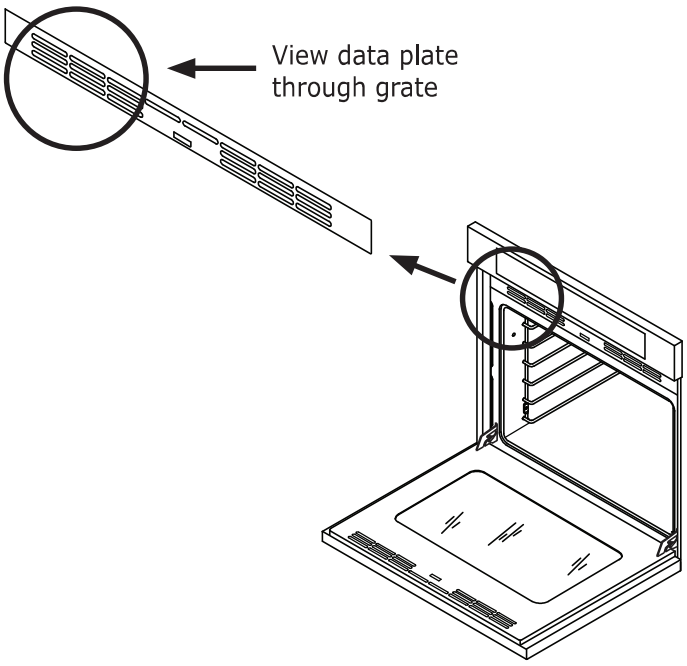

Since Dacor continuously improves the quality and performance of our products, we may need to make changes to the appliance without updating this manual.

Visit www.dacor.com to download the latest version of this manual.

Important Information About Safety Instructions

The ***Important Safety Instructions*** and warnings in this manual cannot cover all possible problems and conditions that can occur. Use common sense and caution when installing, maintaining or operating this appliance.

Always contact the Dacor Customer Service Team about problems or conditions that you don't understand.

Safety Symbols and Labels

⚠ DANGER

Immediate hazards that **WILL** result in severe personal injury or death.

⚠ WARNING

Hazards or unsafe actions that **COULD** result in severe personal injury or death.

⚠ CAUTION

Hazards or unsafe actions that **COULD** result in minor personal injury or property damage.

⚠ DANGER

IMPORTANT: To avoid the possibility of explosion or fire, do not store or use combustible, flammable or explosive vapors and liquids (such as gasoline) inside or in the vicinity of this or any other appliance. Keep items that could explode, such as aerosol cans away from the burners and oven. Do not store flammable or explosive materials in adjacent cabinets or areas.

⚠ WARNING

WARNING - NEVER use this appliance as a space heater to heat or warm the room. Doing so may result in overheating of the appliance.

⚠ WARNING

WARNING - NEVER cover any slots, holes or passages in the oven bottom or cover an entire rack with materials such as aluminum foil. Doing so blocks air flow through the oven causing a fire hazard.

READ AND SAVE THESE INSTRUCTIONS

Important Safety Instructions

General Safety Precautions

To reduce the risk of fire, electric shock, serious injury or death when using your oven, follow basic safety precautions, including the following:

⚠ WARNING

- If you receive a damaged product, immediately contact your dealer or builder. Do not install or use a damaged appliance.
- Make sure that the oven has been properly installed and grounded by a qualified installer according to the accompanying installation instructions. Have the installer show you the location of the fuse or junction box so that you know where and how to turn off power to the oven.
- Do not install, repair or replace any part of the oven unless specifically recommended in the literature accompanying it. A qualified service technician should perform all other service.
- Before performing any type of service, make sure that the electrical power to the oven is turned off at the circuit breaker or fuse box.
- Only use the oven for cooking tasks expected of a home appliance as outlined in this manual. This oven is not intended for commercial use.
- DO NOT TOUCH THE SURFACES OF THE OVEN DURING OR IMMEDIATELY AFTER USE.
- Make sure individuals who use the oven are able to operate it properly.
- Never allow anyone, including children to sit, stand or climb on any part of the oven including the door. Doing so may cause tipping, damage, serious injury or death.
- Do not leave children alone or unattended in the area around the oven. Do not allow children to play with the controls, pull on the handle(s) or touch other parts of the oven.
- Do not store items of interest to children above the oven. Children could be burned or injured while climbing on the appliance.
- Do not tamper with the controls.
- To prevent the unit from tipping forward and to provide a stable installation, make sure the oven is secured to the cabinet according to the accompanying installation instructions.
- Do not heat unopened food containers such as baby food jars and cans. Pressure build up may cause the container to burst and cause injury.
- Do not use water on grease fires. A violent steam explosion may result. Smother any flames with a lid, cookie sheet or flat tray. Use baking soda or a foam extinguisher to extinguish flaming grease. Be careful to avoid getting burned.
- Keep flammable items, such as paper, cardboard, plastic and cloth away from and out of the oven. Do not allow pot holders to touch hot surfaces.

⚠ WARNING

- Do not wear loose or hanging apparel while using the oven. Do not allow clothing to come into contact with the interior of the oven and surrounding areas during and immediately after use.
- Do not use towels or bulky cloth as pot holders.
- Do not use the oven for storage.
- Clean and maintain the oven regularly as instructed in this manual. Keep the entire oven free of grease that could catch fire.
- Do not touch the outside surfaces of the oven during the self-clean cycle. They will be hot.
- Use cookware only for its intended purpose. Check the manufacturer's recommendations before use to determine if a utensil is suitable for use in an oven. Certain types of glass, ceramic and earthenware are not suitable for use in the oven. Personal injury or damage may result from the improper use of cookware.
- Exercise caution when opening the oven door. Let hot air or steam escape before looking or reaching inside.
- Use extreme caution if adding water to food in the oven. The steam can cause serious burns or scalds.
- Use only dry pot holders when removing food and cookware from the oven. Wet pot holders can cause steam burns.
- For your safety, do not use the oven to cook without the convection filter(s) installed. When the filter is not installed, the spinning fan blades at the back of the oven are exposed.
- Do not allow food to sit in the oven for more than one hour before or after cooking. Eating spoiled food can result in food poisoning.
- Do not leave objects, such as aluminum foil, the meat probe or cookie sheets on the bottom of the oven. Do not allow the broil elements on the ceiling of the oven chamber to be covered up. Do not line the oven with aluminum foil or other materials. Doing so may cause the oven or the items in it to overheat, creating a fire hazard or causing property damage.
- Non-stick coatings, when heated, can be harmful to birds. Remove birds to a separate, well-ventilated room during cooking.

Getting to Know Your Oven

Model Identification

The oven is available in single and double oven models.

Control panel

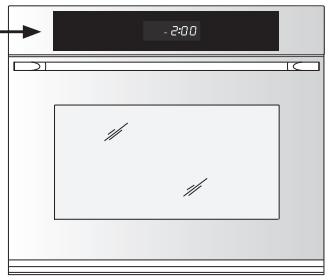

Single oven
Style varies

Control panel

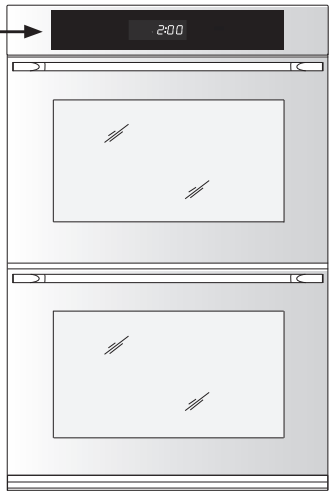

Double Oven
Style varies

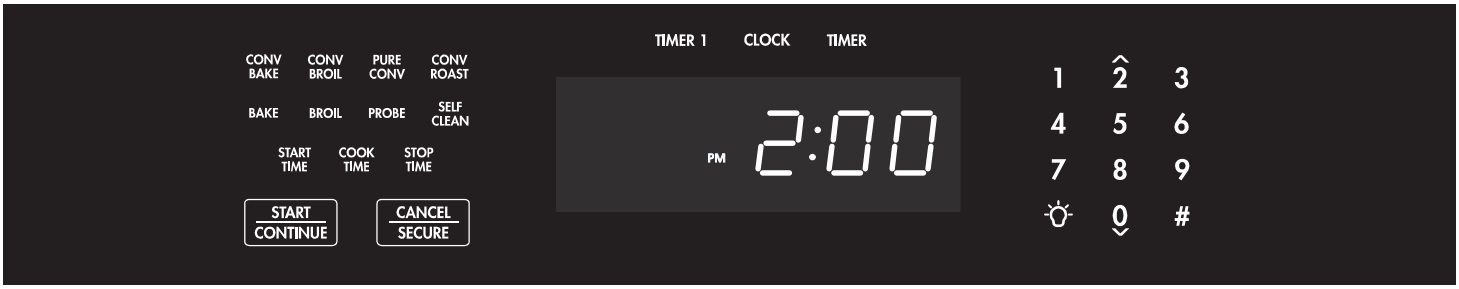

Control Panel - Single Oven

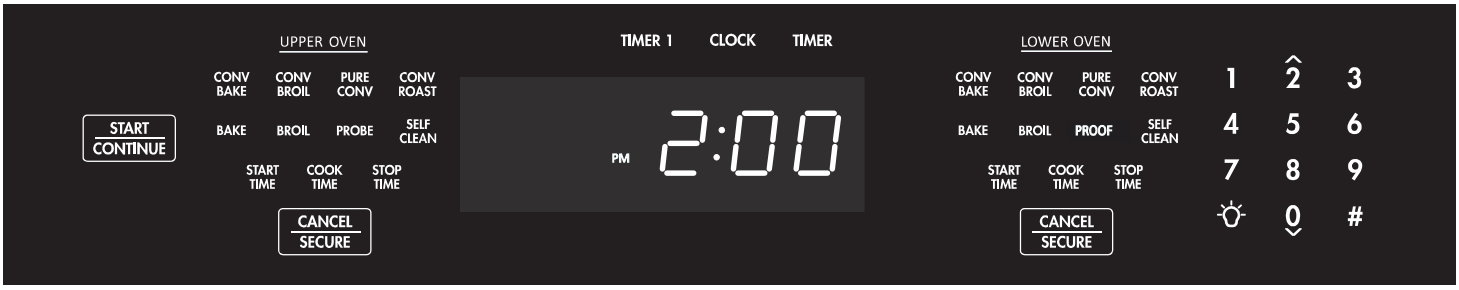

Control Panel - Double Oven

Getting to Know Your Oven

Parts of the Oven

A	**Control panel**	Your oven's control panel consists of touch keys and a display. Use the control panel to control all the oven's features (sometimes called modes).
B	**Air intake/Exhaust slots**	The oven draws air in through the intake slots to cool its internal parts. The air comes out through the exhaust slot at the bottom of the oven. Do not block or cover the air intake or exhaust slots.
C	**Meat probe connector**	When you use the meat probe, insert the skewer into the meat and plug the other end into this connector. See the ***Using the Meat Probe*** section on page 17 for proper operation. On double ovens, only the upper oven is equipped with a meat probe connector.
D	**Oven lights**	There are two oven lights inside the oven chamber so that you can easily see the food inside. Touch the light key on the control panel to turn them on. The bulbs are 12 volt, 20 watt, halogen.
E	**Rack supports**	There are seven sets of rack supports inside each oven chamber. They support the adjustable oven racks. They are numbered from the bottom up.
F	**Door gasket**	The door gasket prevents heat from escaping when the door is closed.
G	**Self-clean latch**	The self-clean latch automatically locks the oven door during the self-clean cycle. The door latches for your safety. There are very high temperatures inside the oven during the self-clean cycle.
H	**Broil elements**	The broil elements are located on the ceiling of the oven chamber. They are hidden behind a glass panel. They are the source of top heat.
J	**Convection fan**	The convection fan blows heated air into the oven chamber during the convection cooking process. The convection filter covers it.
K	**Convection element**	The convection element heats the air that is blown into the oven chamber by the convection fan during the convection cooking process. The convection filter covers it.
L	**Convection filter**	The convection filter covers the convection fan. It helps prevent the transfer of taste from one food to another when you are cooking a whole meal. It also keeps the oven cleaner and covers the moving fan blades for safety purposes.
M	**Oven rack**	Your oven comes with a GlideRack™ oven rack and a set of standard racks. The total number of racks depends on the model.
N	**Bake element**	Hidden below the floor of the oven chamber is the bake element. It is the source of bottom heat.
P	**Recessed Oven Cell Bottom**	The recessed oven bottom is designed to allow a 30 minute oven steam clean. See page 26 for instructions.

Getting to Know Your Oven

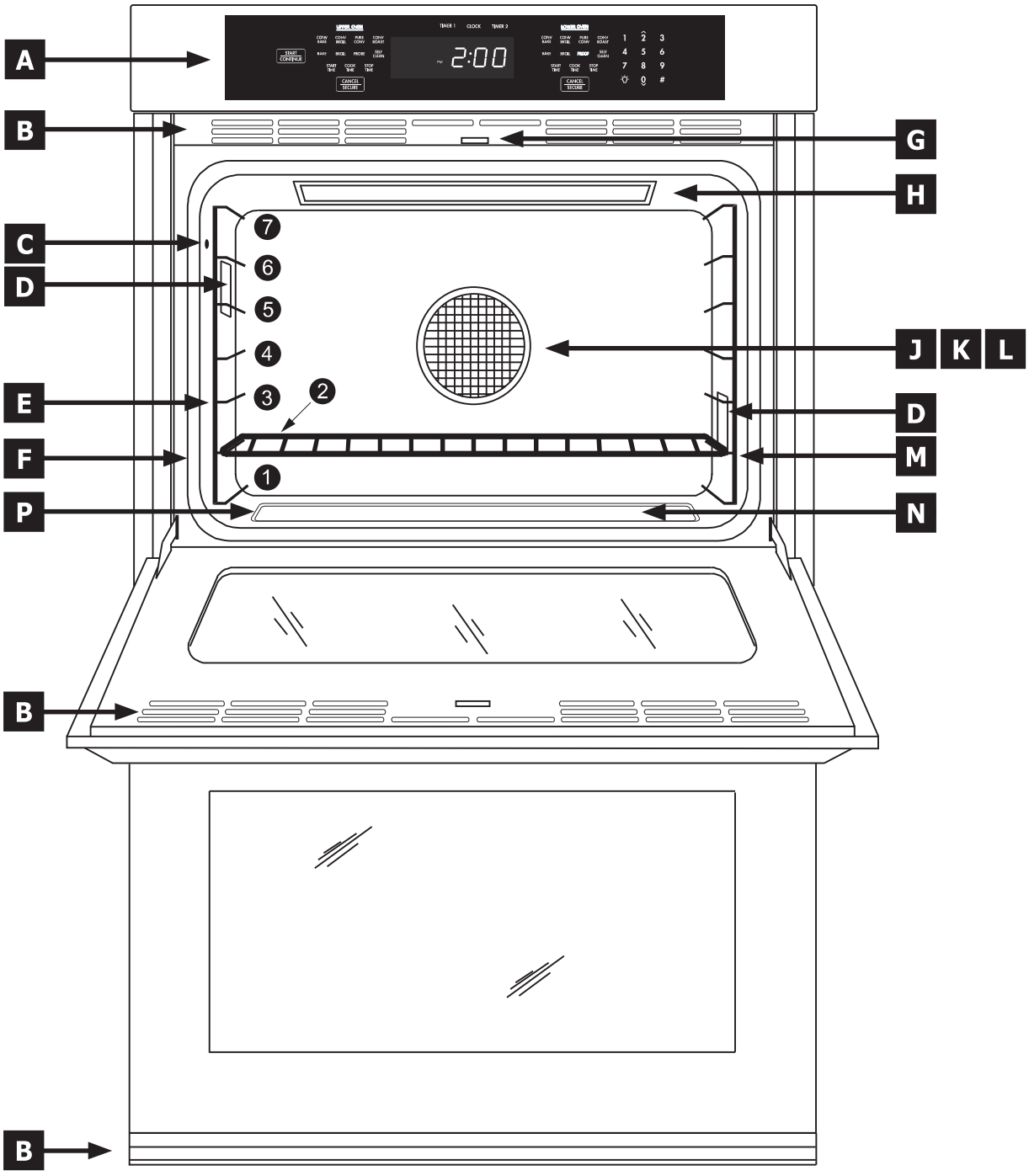

Getting to Know Your Oven

Control Panel Layout

A	**START/CONTINUE key**	When you use the various features (or modes) on your oven, select the cooking mode first, then touch the **START** key. Also, use the **START** key to start the timers.
B	**Cooking mode keypad**	Select the type of cooking you want to perform by touching one of the cooking mode keys. Also includes the **Self-clean** and **PROBE** keys, and on double ovens, the **PROOF** key. Double ovens have two cooking mode keypads, one for the upper oven and one for the lower.
C	**CANCEL · SECURE key**	Use this key to turn off your oven. This key sets all temperature settings back to zero and turns off any features (except the timer) that are currently in use. It also activates the lock-out feature. On double ovens, there is a **CANCEL · SECURE** key for each oven.
D	**Display**	The control panel display provides various types of information about the oven, including the current time (once the clock is set), the current cook settings and the cooking temperature. See below for the symbols that appear on the display.
E	**Number keypad**	When you want to set the temperature, cook time or the time, use the number keypad.
F	**Delay timed cooking keys**	Use these keys to set the oven to turn on or off automatically at a later time. On double ovens, there is a set of delay timed cooking keys for each oven. See page 15 for instructions.
G	**TIMER keys**	Use the **TIMER 1** and **TIMER 2** keys to time an event. The two timers operate separately from each other. You can use them even if the oven is not in use. They do not turn the oven on or off. See page 15 for instructions.
H	**CLOCK key**	Use this key to set the clock. See page 8 for details.
J	**Light key**	Located on the number keypad. If you need to turn the oven lights on or off, touch the light key.
K	**Sabbath key (#)**	Use this key to start Sabbath mode. See page 20 for details.

Display Symbols

Convection

Bake

Broil

Roast

Meat probe

Door lock (self-clean)

Timer

Self-clean

Timer numbers

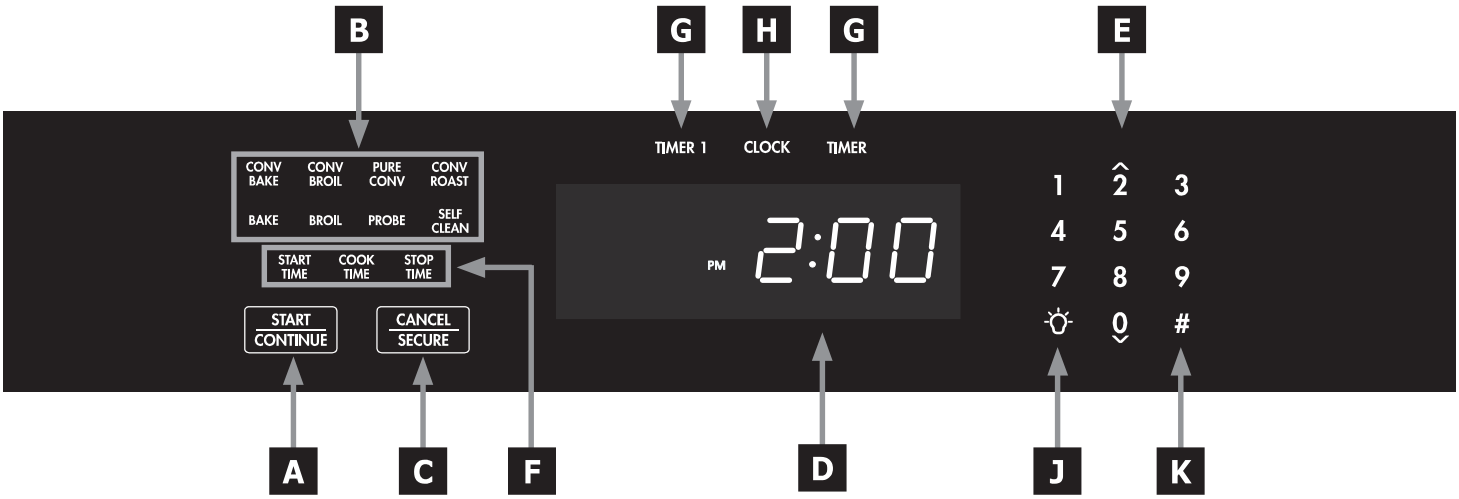

Control Panel - Single Oven

Control Panel - Double Oven

Operating Your Oven

Control Panel Settings

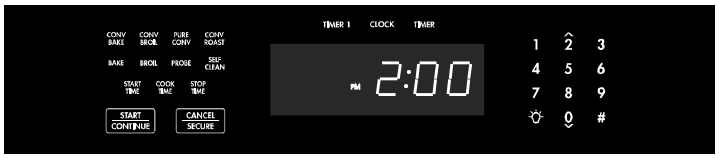

Setting the Clock

1. Touch the **CLOCK** key. The colon between the minutes and seconds on the time display will begin to flash.
2. Enter the current time on the number keypad before the colon stops flashing. For example: For 12:08, touch 1-2-0-8 on the keypad. Touching the **#** key changes the **AM-PM** indicator.
3. Touch **START**.

IMPORTANT

- The clock cannot be set during delay timed cooking, if one of the timers is in use or if self-clean or Sabbath mode is active.
- After a power failure, the time on the display may flash, indicating that the time may not be correct.
- After touching the clock key, you must enter the time and touch **START** soon afterward. If you wait longer than six seconds between touching keys, the display will go back to the original setting.

24/12 Hour Clock (Military Time)

The oven is set to 12-hour (non-military) time at the factory. 24 hour time is also known as military time. 1:36 PM = 13:36 military time.

If you want to switch the clock to 24 hour time or switch from military back to regular time:

1. Touch and hold the **CLOCK** key for six seconds. The display will indicate the mode the clock is currently set to, **12 Hr** or **24 Hr**.
2. Touch the **#** key to change the clock mode. To leave the setting as is, do not touch any keys.
3. Touch **CANCEL · SECURE** to return to the main display. If you have set the clock to 24 hour time, the keypad will allow you to enter military time when setting the clock.

Setting the Temperature Scale

You can select the temperature scale (Fahrenheit or Celsius) the oven uses to display the cooking temperature. The oven is preset at the factory to Fahrenheit.

To change the temperature scale:

1. Touch and hold the **BROIL** key (under **UPPER OVEN** on double ovens) for six seconds.
2. The display will indicate the temperature scale the control panel is currently set to, "**F**" or "**C**".
3. Touch the **#** key to change the temperature scale. To leave the setting as is, do not touch any keys.
4. Touch **CANCEL · SECURE**. The control panel will go back to the regular clock display, set to the new temperature scale.

Turning the Control Panel "Beep" Off/On

The control panel beeps any time you touch any of the keys or when various error conditions exist. It also beeps when a timer is done counting down (page 15) or whenever the oven performs certain preset functions, for example, pre-heat is complete. The tone may be silenced so that it does not function under the above conditions.

To turn the control panel "beep" off (or on):

1. Touch and hold the **START TIME** key for six seconds, until "beep" appears on the display.
2. Touch the **#** key repeatedly to switch between "**On**" and "**Off**".
3. Touch **CANCEL · SECURE** when the desired mode appears on the display.

To change the control panel back to the previous mode, repeat the above steps.

Before You Cook...

- Dacor recommends turning the oven on for one hour at 500°F to burn off any residual oils used during the manufacturing process. Any of these oils left on the inner parts can cause an undesirable smell the first few times the oven is used.
- When you use your oven to bake or roast, it preheats automatically. The preheat cycle rapidly brings the oven chamber up to the proper cooking temperature. It takes several minutes to preheat the oven. Preheat time depends on the temperature settings. The time may be longer depending on the type of electrical supply in your community. There is no preheat cycle for any of the broil modes.
- After you pull food out of the oven, it will continue to cook. This process is called "carry-over." The larger the portion of food, the longer it will cook. It is best to let the meat rest after it comes out of the oven for 10 to 15 minutes before carving. Doing so will allow the meat to retain its juices and make it easier to carve.

CAUTION

Do not allow acids (citrus juices, tomato sauces, etc.) to remain on the oven's surfaces. The porcelain finish may stain or pit.

Racks

You may use either rack type on any level inside the oven.

⚠ WARNING

To reduce the chance of burns, position the oven racks when the oven is cool. If you must reposition a rack when the oven is hot, use pot holders.

To insert the standard oven racks...

1. Insert the end of the rack with the safety notches into the oven first.
2. Attach both sides of the rack to the rack supports in the oven as shown in the diagram below.
3. Begin to slide the rack in, and then, lift up so that the safety notches clear the ends of the rack supports.
4. Push the rack all the way in with both hands.

To remove the standard oven racks...

- If you want to remove an oven rack, grasp it with both hands and pull gently straight out toward you until it stops.
- To remove the rack completely, lift the front of the rack up about six inches and continue to pull it out. Lifting the rack releases the safety notches. The safety notches reduce the chances of a rack coming out of the oven accidentally.

To insert your GlideRack oven rack...

Your oven comes with a Dacor GlideRack oven rack. You can pull the GlideRack oven rack out further than the standard racks and still support heavy pots and pans full of food. It is great for heavier foods and the optional Dacor baking stone.

1. Align both sets of safety clips (right and left) on the back of the rack guides with the oven rack supports as shown below. **NOTE:** The diagram below shows installation with the rack guides extended but, the rack may be installed with or without the guides extended, whichever is easier.
2. Begin to slide the rack in, lifting the front safety clips over the front of the oven rack supports.
3. Push the rack all the way in.
4. Grasp the rack in the center of the front and pull. The rack should come forward while the guides remain in place.

To remove your GlideRack oven rack...

- Grasp the rack with both hands and pull it gently straight out toward you until it stops.
- Lift up until the front safety clips just clear the front of the rack supports on the oven. Continue to pull out. Moving the end of the rack back and forth slightly, left to right, as you pull, will make it easier to remove.

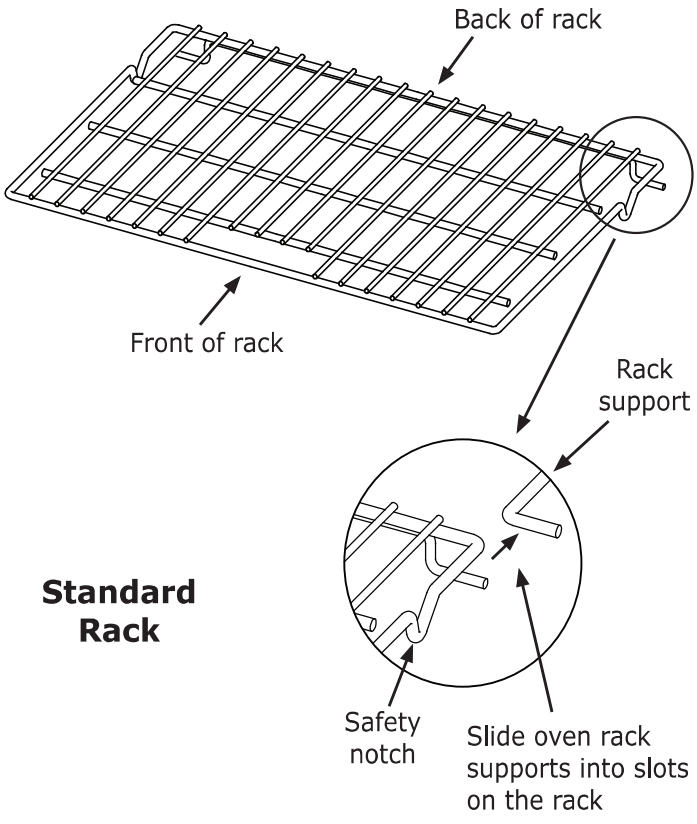

Standard Rack

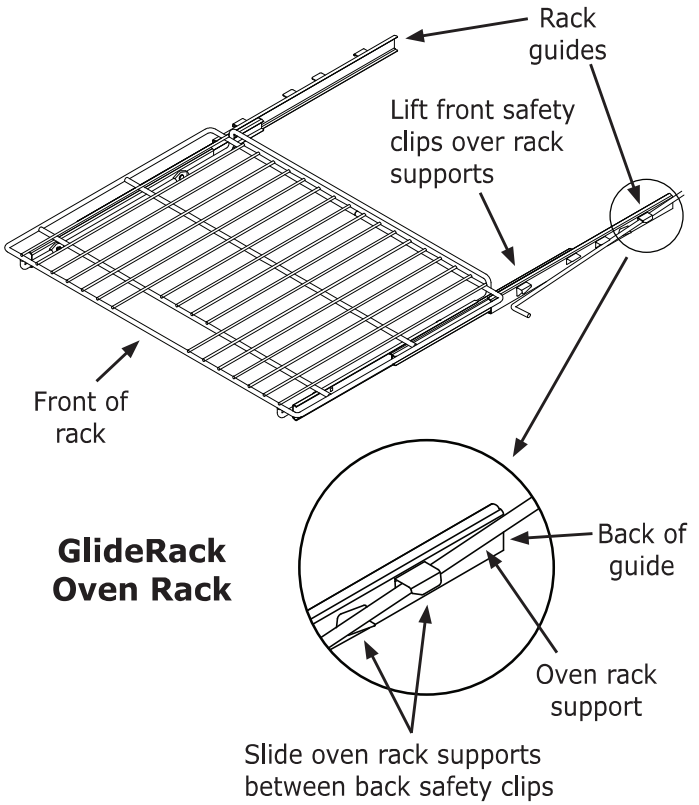

GlideRack Oven Rack

Operating Your Oven

Starting Your Oven

1. Adjust the racks to the appropriate level.
2. Determine the best cooking mode for the type of food to be cooked.

Select from the following...

- **CONVECTION BAKE** - A combination of the convection fan and a bottom heat source. Good for single rack items in a deep pan.
- **CONVECTION BROIL** - A combination of the convection fan and a top heat source. Good for items that do not need to be flipped, such as thinner cuts of meat, fish, and garlic bread.
- **PURE CONVECTION™** - Uses convection cooking only for even heat. Use for baked goods and multiple rack cooking.
- **CONVECTION ROAST** - Combines top and bottom heat sources with the convection fan. Best for rib roasts, turkeys, chickens, etc.
- **BAKE** - Cooks with a bottom heat source only. Commonly used for basic recipes.
- **BROIL** - Cooks using a top heat source alone. Use for grilling smaller cuts of meat or toasting bread.

IMPORTANT

The broil modes will not work when the meat probe is connected.

See pages 12 to 14 for detailed descriptions of the various cooking modes.

3. Touch the key for the desired cooking mode. The preset (jump-in) temperature will appear on the display along with the symbol(s) for the selected cooking mode (see above). On double ovens, select the desired oven by touching the cooking mode key under **UPPER OVEN** or **LOWER OVEN** on the control panel.
4. To cook at the preset temperature, touch **START**. To cook at a different temperature enter it (for example 4-2-5) on the number keypad, then touch **START**. You can enter any temperature between 100°F and 555°F. The suggested broil temperature is 555°F. Double ovens have only one **START** key, on the left side of the control panel. Use it to start both ovens.
5. If you are using Pure Convection or one of the bake or roast modes, "**PRE-**" for preheating, along with the current oven temperature will appear on the display until the oven reaches the set temperature. Once the oven reaches the set temperature (usually in 15 to 20 minutes), it will beep and "**PRE-**" will disappear. Carefully place your food in the oven. Excessive browning will occur if you put the food in too soon.

Turning Off Your Oven

To turn the oven off, touch the **CANCEL · SECURE** key. On double ovens, touch the **CANCEL · SECURE** key under **UPPER OVEN** or **LOWER OVEN**.

NOTE

After you turn off the oven, the cooling fans may continue to run until the oven's internal parts have cooled down.

Changing the Temperature

To change to a different temperature while the oven is on:

1. Touch the key for the current cooking mode. The current cooking mode appears on the display (for example **BAKE**).
2. Enter the temperature on the keypad (for example 3-7-5) and touch **CONTINUE**.

IMPORTANT

If you increase the temperature by 50°F or more, the oven will go into preheat mode to raise the temperature rapidly to the new setting. "**PRE-**" will appear on the display. To prevent excessive browning Dacor recommends that you remove the food from the oven when "**PRE-**" appears on the display. If you lower the temperature, it is best to wait until the display indicates the new lower temperature before you insert the food in the oven as well.

Changing the Oven Cooking Mode

To change to a different cooking mode while the oven is on, for example to change from Convection Bake to Bake:

1. Touch the key for the new cooking mode, for example **BAKE**.
2. Touch **CONTINUE**.

Preset (Jump-in) Temperature Settings

Your oven has a preset "jump-in" temperature setting for each of the cooking modes to reduce the need to always enter the temperature. See the table below. See ***Starting Your Oven*** for directions on how to cook at the preset temperature.

Cooking Mode	Preset Temperature
Convection Bake	325°F
Convection Broil	555°F
Pure Convection	325°F
Convection Roast	375°F
Bake	350°F
Broil	555°F

Lock-Out Feature

If you want to disable the keys on the control panel when the oven is not in use:

- Push and hold the **CANCEL · SECURE** key for about three seconds. The control panel keys will stop working and "**OFF**" will appear on the display. Only the **CANCEL · SECURE** and the oven light keys remain functional. On double ovens, touching either **CANCEL · SECURE** key locks the control panel for both ovens.
- To reactivate the control panel, touch and hold the **CANCEL · SECURE** key for three seconds.

NOTE

Using the lock-out feature turns off the timers if they are in use.

12 Hour Timer Feature

Your oven is equipped with a feature that automatically turns it off after 12 hours of continuous use. The 12 hour timer resets if you change the cooking temperature or cooking mode.

The oven ships from the factory with the 12 hour timer enabled.

NOTE

The 12 hour timer is disabled when the Sabbath feature is in use.

To disable or enable the 12 hour timer feature...

- With the oven off, push and hold the **TIMER 1** key for about ten seconds, until the control panel beeps and "**12Hr**" appears on the display. "**ON**" will appear on the display if the 12 hour timer is enabled.
- Push the **#** key to disable (or enable) the 12 hour timer.
- Push **CANCEL · SECURE** to save the changes and return to the clock display.

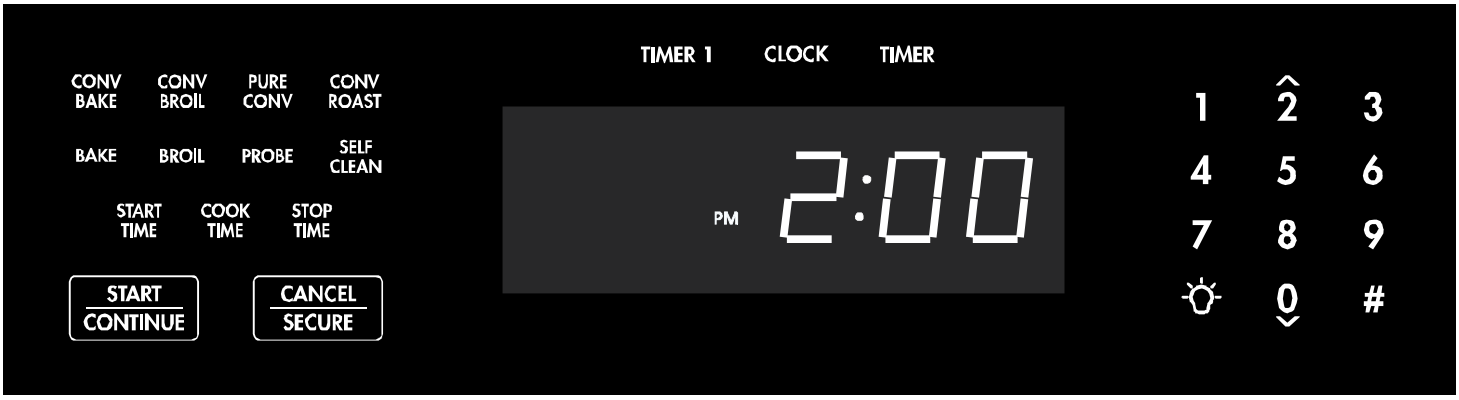

Operating Your Oven

Understanding the Various Oven Modes

The three basic styles of cooking in an oven are:

- ◇ **Baking:** The gentle cooking of dry goods such as cookies, cakes, soufflés, etc.
- ◇ **Roasting:** The cooking of meats or vegetables over a period of time.
- ◇ **Broiling:** Cooking with an intense heat for a short amount of time.

Bake

Uses only a heat source from below the food. This mode is the stand-by, non-convection mode. All baked items will turn out nicely in this mode.

Baking Tips

- For best results, use a single rack when using bake mode. See page 23 for suggested rack positions for various foods. For cooking on multiple racks, Dacor recommends using one of the convection modes.
- Follow your recipe's original cooking time and temperature.
- Do not open the oven door frequently during baking. Look through the oven door window to check the progress of baking whenever possible.
- Use the timers to determine baking time.
- Wait until the shortest recommended baking time before checking the food. For most baked goods, a wooden toothpick placed in the center should come clean when the food is done.

Common Problems When Using the Bake Mode

Problem	May be caused by	What to do
Cookies burn on the bottom.	Oven door opened too often.	Set timer to shortest recommended cooking time and check food when timer beeps. Use door window to check food.
	Incorrect rack position used.	Change rack position.
	Dark, heat absorbing cookie sheets used.	Use shiny, reflective cookie sheets.
Cookies are too brown on top.	Rack position being used is too high.	Change rack position.
	Food placed in oven during preheat.	Wait until oven is preheated.
	Incorrect baking mode being used.	See ***Select from the Following*** on page 10 for guidelines.
Cakes burn on the sides or are not done in the center.	Oven temperature too high.	Reduce oven temperature.
	Dark, heat absorbing cake pans used.	Use shiny, reflective cake pans.
Cakes crack on top.	Oven temperature too high.	Reduce oven temperature.
Cakes are not level.	Oven and/or oven rack not level.	Level oven and rack as needed.
Pies burn around the edges or are not done in the center.	Oven temperature too high.	Reduce oven temperature.
	Dark, heat absorbing pans used.	Use shiny, reflective pans.
	Oven and/or rack over-crowded.	Reduce number of pans.

Your oven offers three convection cooking modes...

- **Pure Convection**
- **Convection bake**
- **Convection roast**

As a general rule, in the convection modes time is about 25% shorter. Set the timer 15 minutes before the shortest stated time and add more time if necessary.

For Pure Convection and convection bake modes...

Some recipes, especially those that are homemade, may require adjustment and testing when converting from standard to convection baking. If you are unsure how to convert a recipe, begin by preparing the recipe using the standard bake settings.

If the food is not cooked to your satisfaction during this first convection trial, adjust one recipe variable at a time (such as cooking time, rack position, or temperature) and repeat the convection test. If necessary, continue adjusting one recipe variable at a time until you get satisfactory results.

Pure Convection

The uniform air circulation provided by Pure Convection allows you to use more oven capacity at once. Use this mode for single rack baking, multiple rack baking, roasting, and preparation of complete meals. Many foods, such as pizzas, cakes, cookies, biscuits, muffins, rolls and frozen convenience foods can be successfully prepared on two or three racks at a time. Pure Convection is also good for whole roasted duck, lamb shoulder and short leg of lamb.

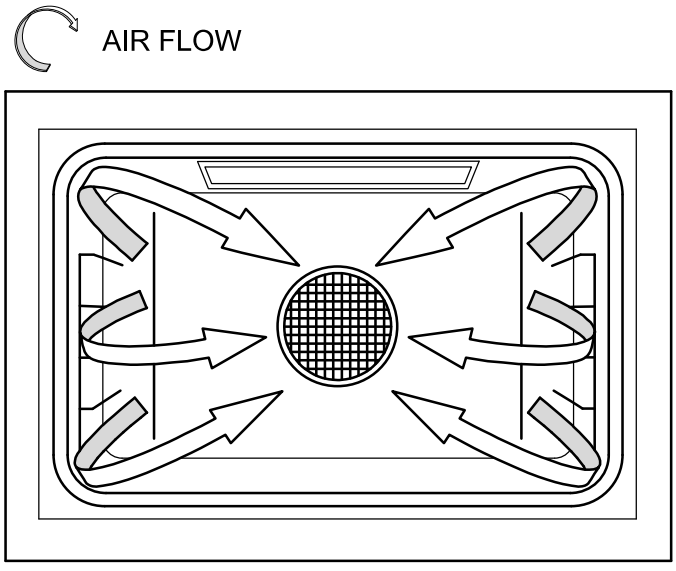

For multiple rack baking...

- Typically, when baking on two racks with your oven, use rack positions #3 and #5 (counting from the bottom up). When baking on three racks, use rack positions #2, #4 and #6.
- When adapting a single rack recipe to multiple rack baking, it may be necessary to add to the baking time due to the extra bulk of the food in the oven.

Convection Bake

Use this mode for single rack baking. The combination of the convection fan and bottom heat source is best for fruit crisps, custard pies, double-crusted fruit pies, quiches, yeast breads in a loaf pan and popovers. Also, items baked in a deep ceramic dish or earthenware clay pots are best in this mode. Most of these items cook in a deep pan and require browning on the top and bottom.

continued...

Understanding the Various Oven Modes (cont.)

Convection Roast

Your oven's Convection roast mode uses a combination of the convection fan and heat sources above and below the food. It is best for rib roasts, turkeys, chickens, etc.

Roasting Tips

All baking modes can be used to roast in your oven.

However, the Convection roast mode is recommended to produce meats that are deliciously seared on the outside and succulently juicy on the inside in record time. Foods that are exceptional, when prepared in the Convection Roast mode, include: beef, pork, ham, lamb, turkey, chicken and cornish hens.

Always roast meats fat side up in a shallow pan, using a roasting rack. Always use a pan that fits the size of the food being prepared. The broiler pan and grill, accompanying the oven, can be used in most cases. No basting is required when the fat side is up. Do not add water to the pan. It will cause a steamed effect. Roasting is a dry heat process.

Poultry should be placed breast side up on a rack in a shallow pan that fits the size of the food. Again, the broiler pan and grill accompanying the oven can be used. Brush poultry with melted butter, margarine or oil before and during roasting.

When using the roast mode, do not use pans with tall sides. They interfere with the circulation of heated air over the food.

If using a meat thermometer, insert the probe halfway into the center of the thickest portion of the meat. For poultry, insert the thermometer probe between the body and leg into the thickest part of the inner thigh. To ensure an accurate reading, the tip of the probe should not touch bone, fat, or gristle. Check the meat temperature 2/3 of the way through the recommended roasting time. After reading the meat thermometer once, insert it 1/2 inch further into the meat, then take a second reading. If the second temperature registers below the first, continue cooking the meat.

Remove meats from the oven when the thermometer registers 5 to 10°F below the desired temperature. The meat will continue to carry-over.

Allow roasts to stand 15 to 20 minutes after roasting in order to make carving easier.

Roasting times always vary according to the size, shape and quality of meats and poultry. Less tender cuts of meat are best prepared in Bake mode and may require moist cooking techniques. Use your favorite cookbook recipes.

Reduce spatter by lining the bottom of the roasting pan with lightly crushed aluminum foil.

Your oven offers two broil modes...

- **Broil**
- **Convection broil**

⚠ WARNING

- Use the broil and convection broil modes only with the oven door completely closed.
- To avoid damage to the meat probe, remove it from the oven when using either of the broil modes. If the meat probe is connected the broil modes will not start. The meat probe symbol will flash when you attempt to start the oven in one of the broil modes with the meat probe connected.

Broiling is a quick, flavorful way to prepare many foods, including steaks, chicken, chops, hamburgers and fish.

Broil

Uses a top heat source. It is best for broiling smaller amounts of food.

Convection Broil

This mode uses a combination of the convection fan and a top heat source. It is best for items that do not need to be flipped such as, thinner cuts of meat, fish and garlic bread.

Broiling Tips

- To reduce the chance of overcooking, use rack positions 1 through 4. Results will vary based on the type of food being broiled and the rack position used.
- It is normal and necessary for some smoke to be present to give the food a broiled flavor.
- Setting the timer is recommended to time the broiling process.
- Always use a broiler pan and grill to provide drainage for excess fat and grease. Doing so will reduce spatter, smoke and flare-ups.
- Start with a room temperature broiler pan for even cooking.
- Use tongs or a spatula to turn and remove meats. Never pierce meat with a fork because the natural juices will escape.
- Broil food on the first side for a little more than half of the recommended time, then season and turn. Season the second side just before removing the food from the oven.
- To prevent sticking, lightly grease the broiler grill. Excess grease will result in heavy smoke. For easier cleaning, remove the broiler pan and grill when removing the food.

Timers

⚠ WARNING

The timers on your oven do not turn the oven on or off. They are only for timing purposes. When you want to turn the oven off automatically, use the ***Delay Timed Cooking Features***.

NOTE

Touching the **CANCEL · SECURE** key does **NOT** reset or stop the timers.

Your oven is equipped with two built-in timers...

- You can use both of them at the same time.
- You can time from 1 minute to 99 hours and 59 minutes.
- The timer symbol appears on the display when one or both of the timers is in use.

To use the timers on your oven...

1. Touch the **TIMER 1** or **TIMER 2** key.
2. Enter the hours and minutes to be timed on the keypad and touch **START**. To enter 11 hours, 30 minutes, touch 1-1-3-0. To time 25 minutes, touch 2-5. When you touch **START**, the time will appear on the display and begin to count down.

When the timer is done counting down, **0:00** will appear on the display. The timer number will flash on the display and the alarm (a beeping sound) will sound. The alarms for Timer 1 and Timer 2 have different patterns.

Timer	Alarm Pattern
1	1 second on, 1 second off, repeat
2	1 second on, 1 second off, 2 seconds on 1 second off, repeat

When the alarm sounds, touch either **TIMER** key to stop the alarm. Touch **CLOCK** to return to the main display.

While a timer is running you can...

- Touch **CLOCK** to view the current time.
- Touch **TIMER 1** to view the time left on (or set) timer 1.
- Touch **TIMER 2** to view the time left on (or set) timer 2.

To change the amount of time on a timer...

1. Touch the **TIMER 1** or **TIMER 2** key.
2. Enter the new time on the keypad and touch **START**.

To stop a timer before time runs out...

- Touch the **TIMER 1** or **TIMER 2** key twice. The timer will stop and the display will clear.
- Touch **CLOCK** to return to the main display.

Delay Timed Cooking Features

If you want to set the oven to automatically turn itself on or off at a later time, you can use the delay timed features.

Things to Know About Delay Timed Cooking

- The delay timed options work for all of the various cook modes, except broil and convection broil.
- You may use the timers while using the delay timed features. The timers do not have an effect on any of the delay timed cooking options.
- The delay timed cycle can be canceled at any time by pushing **CANCEL · SECURE**.

⚠ WARNING

Food safety is an important consideration when using the delay timed features. To avoid potential sickness and the spoiling of food, take the following steps:

- Avoid using foods that will spoil while waiting for the oven to start cooking. Typical foods to avoid include: those containing eggs and dairy products, cream soups and cooked or uncooked meats, poultry, and fish.
- Do not allow foods to remain in the oven after it turns completely off. When the temperature drops below 140°F, bacteria can develop (after hold mode).
- If cooking will not begin immediately, place only very cold or frozen food into the oven. Most unfrozen foods should never stand in the oven for more than two hours before cooking begins.

The Three Ways to Use Delay Timed Cooking

- Set the time the oven turns on (**START TIME**) and set it to turn off at a later time using either the **COOK TIME** key or the **STOP TIME** key.
- Set the **START TIME** only, then turn the oven off manually when you are done cooking.
- Turn the oven on manually and set it to turn off at a later time using either the **COOK TIME** key or the **STOP TIME** key.

continued...

Delay Timed Cooking (cont.)

About the 3 Delay Timed Settings

The delay timed cooking keys are:

- **START TIME**: The time the oven starts cooking
- **COOK TIME**: The amount of time the oven cooks before it goes into hold mode.
- **STOP TIME**: The clock time the oven turns off and goes into hold mode.

When you set 2 of the 3 above, the oven automatically calculates the third.

About Hold Mode

- When you set the oven to stop cooking using the **COOK TIME** or **STOP TIME** keys, it will go into "hold" mode (**HLd** appears on the display) when it reaches the end of the cook time you have set. The oven will keep the temperature at 150°F for two hours.
- Touch **CANCEL · SECURE** to turn the oven all the way off.
- To prevent sickness, do not allow foods to remain in the oven after it is off (after hold mode turns off).

Using Delay Timed Cooking

NOTE

Delay-timed cooking cannot be used in Sabbath mode.

1. Adjust the racks to the appropriate level.
2. Put the food in the oven.
3. Touch the key for the desired cooking mode (except Broil or Convection Broil).
4. Enter the desired cooking temperature on the number keypad.
5. If you want to turn the oven on immediately and turn off automatically at a later time, skip to step 8.
6. Touch the **START TIME** key.
7. Enter the time you want the oven to start on the keypad. For 12:35, touch 1-2-3-5. You may enter a time up to 22 hours and 59 minutes ahead of the present time. Touch the **#** key to change "**AM**" or "**PM**."
8. If you want to set the stop time or cooking duration, touch either the **STOP TIME** or **COOK TIME** key (otherwise skip to step 9). Using the **COOK TIME** key allows you to determine when the oven will stop cooking by entering the amount of time the oven is on. Using the **STOP TIME** key allows you to determine when the oven will stop cooking by entering the clock time. Using either key achieves the same result.
9. Touch **START.**
10. If you entered a **START TIME**, the oven will start at the start time entered.
11. If you entered a **COOK TIME** or **STOP TIME** the oven will cook until the time entered and then, go into hold mode.

IMPORTANT

The time required to preheat the oven must be included in the amount of cook time. For cooking temperatures of 350°F and below, add 13 minutes to the cook time. Increase the cook time as the temperature increases above 350°F.

Other Things to Know About Delayed Timed Cooking

When the oven is in delay timed mode...

Push the **CLOCK** key to view the time.

Push the **START TIME** key to view the current start time setting.

Push the **STOP TIME** key to view the current stop time setting.

Push the **COOK TIME** key to view the current cook time setting.

Using the Meat Probe

When you cook foods like roasts and poultry, the internal temperature is the best way to tell when the food is properly cooked. Your oven's meat probe is an easy way to take the guesswork out of roasting. You can use it to cook food to the exact temperature you desire. The probe can be set from 100°F to 200°F.

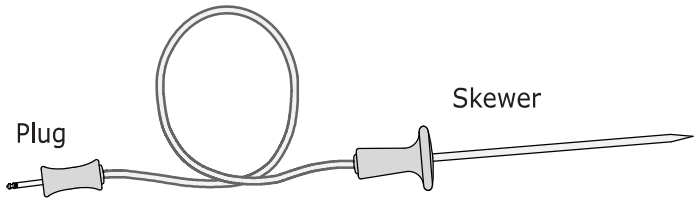

⚠ WARNING

- To avoid the possibility of burns, use hot pads to handle, connect, and unplug the meat probe when the oven is hot.
- Use the handles to insert and remove the meat probe's skewer and to connect it to the oven. Pushing or pulling on either end of the cable could damage the meat probe. To avoid breaking the meat probe, make sure the food is completely defrosted before inserting the skewer.
- To prevent damage, never leave the meat probe inside the oven when it is not being used, especially during the self-clean cycle.
- Using a meat probe other than the one provided with your oven may result in damage to the probe and/or the oven.

NOTE

- The meat probe does not work with broil or convection broil and Sabbath modes. Plug in the meat probe when using the above modes, the meat probe symbol will flash indicating an error.
- If the meat probe is accidently disconnected after the **PROBE** key is touched, the meat probe symbol will flash and the error message "**OPn**" will appear on the display.

To use the meat probe...

1. Prepare the meat for cooking prior to setting the oven. Insert the meat probe skewer into the center of the meat. Make sure that the skewer is not inside any fatty portions of the meat and does not touch any bones. The point should rest in the thickest part of the meat. When you are cooking fowl, the tip of the skewer should rest toward the center of the bird.
2. Before placing the meat in the oven and with the door closed, push the **BAKE**, **CONV BAKE**, **PURE CONV** or **CONV ROAST** key. The preset temperature will appear on the display. If you want to cook using a different oven temperature, enter it on the number keypad.
3. Touch **START**.
4. Allow the oven to preheat. Excessive browning may occur if the meat is placed in the oven during preheat mode (when "**PRE-**" appears on the display).
5. Once the oven has preheated ("**PRE-**" disappears), put the meat in the oven using pot holders. Insert the meat probe plug into the connector inside the oven.
6. Push the **PROBE** key. The preset probe temperature (160°F), as well at the probe symbol, will appear on the display. If you want to cook using a different probe temperature, enter it on the keypad. Use the ***USDA Minimum Safe Cooking Temperature Chart*** on page 18 as a guideline for the type of meat you are cooking.
7. Touch **START**. If you do not touch **START**, the probe mode will not start.

When the meat probe is in use, the oven will automatically control the cooking time. The temperature on the display during cooking is the temperature measured inside the meat. The oven will continue to cook until the meat temperature reaches the temperature you have entered.

When the meat is done, the oven will go into hold mode. The temperature will reduce to 150°F for two hours to keep the meat warm and safe for serving. To prevent sickness, do not allow foods to remain in the oven after it has turned off. Touch **CANCEL · SECURE** to cancel hold mode and turn the oven completely off.

To change the meat probe temperature during cooking...

1. Touch **PROBE**. The current probe temperature will appear on the display.
2. Enter the new temperature. The oven will automatically change to the new probe temperature. If you do not enter a temperature, the oven will continue to cook at the current setting.

To change the cooking mode during meat probe cooking...

1. Touch the **CANCEL · SECURE** key.
2. Touch the **BAKE**, **CONV BAKE**, **PURE CONV** or **CONV ROAST** key. If you want to cook using temperature different than the oven preset temperature, enter it on the number keypad.
3. Touch **CONTINUE**.

To cancel meat probe operation while the oven is cooking...

- Touch the **CANCEL · SECURE** key.

continued...

Using the Meat Probe (cont.)

Important details about the meat probe:

- You must select the specific cooking mode (**BAKE**, **CONV BAKE**, **PURE CONV** or **CONV ROAST**) before you touch the **PROBE** key.
- When using the meat probe feature the preheat cycle is disabled. For best results, select the mode and allow the oven to preheat prior to starting the meat probe feature.
- The meat probe function will automatically cancel after 30 seconds if the meat probe is not connected. The meat probe symbol will flash on the display.
- The meat probe feature takes precedence over the delay timed cooking feature. The oven will continue to cook the meat until it reaches the selected meat probe temperature regardless of the **STOP TIME** or **COOK TIME** setting, then go into hold mode.

USDA Minimum Safe Internal Cooking Temperatures for Various Foods

Ground Meat and Meat Mixtures	
Beef, pork, veal, lamb	160°F
Turkey, chicken	165°F
Fresh Beef, Veal and Lamb	
Steaks, roasts, chops	145°F
Poultry	
Chicken and turkey, whole (temperature taken in thigh)	165°F
Poultry breasts, roast	165°F
Poultry thighs, legs, wings	165°F
Duck and goose	165°F
Stuffing (cooked alone or in bird)	165°F
Fresh Pork	
Fresh pork	160°F
Ham	
Fresh (raw)	160°F
Pre-cooked (reheat)	140°F

NOTE: The minimum safe internal cooking temperatures are subject to change. There are changes in bacteria and the temperatures required to eradicate them. For the most current information, contact the USDA.

USDA Meat and Poultry Hot Line: Phone: (800) 535-4355
www.fsis.usda.gov

Dehydrating/Defrosting

Your oven can be used to dehydrate or defrost foods at low heat settings in the Pure Convection mode.

⚠ WARNING

To avoid food poisoning, cook meats immediately after defrosting them.

To dehydrate or defrost foods

1. Adjust the racks to the appropriate level.
2. Place the food on the center of the oven rack. (If you are dehydrating, prepare food as recommended, then place it on a drying rack).
3. Touch the **PURE CONV** key.
4. To defrost meats, enter the temperature up to 150°F on the keypad. To dehydrate, start by setting the temperature according to the table below. When dehydrating, you may need to experiment with higher temperatures.
5. Touch **START**.

Food Type	Dehydrating Temperature
Fruit	100°F
Vegetables	125°F
Meat	150°F

Dacor recommends that you use one of the timers to time the process.

Dehydrating Tips

Equipment Recommended:

- Half sheet pan or jelly roll pan with ½" rim all the way around
- Baking rack that fits inside the half sheet pan
- Cheesecloth
- 4 quart sauce pot with lid
- Steamer basket that fits inside 4 quart saucepan. One that is perforated and opens up will work well.
- Slotted spoon
- Paper towels
- A sharp knife

When you dehydrate...

1. Wash and remove excess moisture from all fruits and vegetables before dehydrating.
2. Cut fruits and vegetables into uniform pieces.
3. You can add honey, spices, lime juice, or orange juice to give the fruit a different flavor.
4. It is best to dehydrate on a baking rack with a pan underneath to catch any juices. If the fruit is small, use cheesecloth over the rack. If you use a rack, it will allow for maximum air circulation around the fruit. The cheesecloth will prevent the fruit from sticking to the rack.
5. Place the food onto the center of the oven rack.

Solving Discoloration Problems

- To prevent darkening during dehydration and storage, you should steam blanch apples, apricots, peaches, nectarines, pears or foods that will oxidize.

To steam blanch:

1. Add 1 inch of water to a 4 quart sauce pot. Insert the steam basket and place the fruit in it.
2. Cover the pot and steam for 1 to 2 minutes.
3. Remove with a slotted spoon and dab with a paper towel to remove excess moisture before dehydrating.

Apples, pears, pineapples and some other fruits will brown or darken during dehydration. To prevent discoloration, dip fruits in pineapple juice or lemon juice after steam blanching.

Creating a Candied Effect

To give the fruit a candied effect and to help retain color, blanch them in a simple syrup. You can candy the fruits mentioned above as well as figs and plums. The basic ratio for a simple syrup is 1 cup of sugar to 1 cup of water. Add these ingredients to a 4 quart stock pot and bring to a boil. Stir until all the sugar dissolves. Remove the saucepan from the cooktop and allow it to cool. Dip fruit into the simple syrup after it has cooled.

Preventing Tough Skins when Dehydrating

You should water blanch items with tough skins such as grapes, prunes, dark plums, cherries, figs and some types of berries. Water blanching these types of fruit will crack the skins so that moisture can escape and dehydration can be done more effectively.

To water blanch...

1. Bring 2 quarts of water to boil in a 4 quart sauce pot.
2. Drop the fruit in the water for 1 to 2 minutes, or until the skin begins to crack.
3. Remove the fruit with a slotted spoon and dab dry with a paper towel before dehydrating. The pit can be left inside or removed half way through the dehydrating process.

Defrosting Tips

- Food that takes an exceptional amount of time to defrost will not defrost well in a convection oven.
- You should not defrost anything that would normally take over 2 hours to thaw. The food will begin to spoil because the defrost temperature is not high enough to cook the food.
- If you have a partially defrosted turkey, rib roast or other large cut of meat, you may continue to defrost it in your convection oven. If wing tips and legs begin to dry out when you defrost poultry, you may wrap the tips with aluminum foil.
- If you are defrosting a small cut of meat, lay it on a flat cookie sheet with a 1-inch rim to catch juices as the meat thaws.
- Thick, frozen casseroles such as lasagna will not defrost well in your oven. Instead, defrost according to the food manufacturer's suggestions. You can defrost casseroles in the refrigerator overnight. You should leave the food in its original container and keep it covered.
- You can bake some foods from frozen. Some examples are: pizza, frozen pastries, croissants, cookies, etc. Before baking frozen food, allow the oven to preheat.

Proofing

You can use your oven to proof yeasted doughs at a low and draft-free temperature using the Bake mode.

1. Touch the **BAKE** key*.
2. Enter the temperature of 100°F on the keypad.
3. Touch **START**.
4. Place the dough in a greased bowl inside of the oven. Cover it with either a damp cloth or plastic wrap coated with a nonstick spray.
5. Turn on the oven lights.
6. Set the timer for the amount of rise time in the recipe.

* Some double oven models have a **PROOF** key for the lower oven. If your oven is equipped with the **PROOF** key, you may touch it instead of the **BAKE** key. When the using the **PROOF** key, the oven presets the temperature.

Sabbath Mode

The Sabbath mode on your oven complies with Jewish laws for use on the Sabbath and Holy Days. This feature allows the oven to perform two types of cooking, Bake and Pure Convection.

When the oven is set to Sabbath mode, it disables the following features:

- The oven lights
- All keys, except **CANCEL · SECURE**, **START** and the **0** and **2** keys on the number keypad.

NOTE

- "**SAb**" appears on the display when Sabbath mode is in operation.
- As with all other cooking modes, when setting the control panel for Sabbath operation all keys must be touched within 6 seconds of each other. Otherwise the control panel will automatically clear.
- On double oven models, you cannot use one oven in normal mode when the other oven is running in Sabbath mode.
- Sabbath mode will not work with the meat probe connected (the meat probe symbol will flash).
- Delay-timed cooking cannot be used in Sabbath mode.
- In the event of a power outage, the oven will return to Sabbath mode at the temperature it was last set to when power is restored.
- If one or both timers are running, the oven cancels timer operation when Sabbath mode is selected.
- You may want to use a rack thermometer to keep track of the oven temperature.

Setting Up the Sabbath Feature

1. Touch the **#** key.
2. Touch the **BAKE** or **PURE CONV** key. On double ovens, be sure to touch the **BAKE** or **PURE CONV** key for the oven you want to use.
3. Touch the **0** or **2** keys repeatedly if you want to change the pre-selected cooking temperature shown on the display.
4. Touch (only) the **START** key. The oven will go into Sabbath mode and cook using the method selected in step 2.

Things to Know about Sabbath Mode

- The **CANCEL · SECURE** key on your oven remains active so that you can turn off the Sabbath feature or turn off the oven. On double ovens, both **CANCEL · SECURE** keys remain active so you can turn off one oven and leave the other oven running.
- On double ovens, you may repeat steps 2 - 4 to start the other oven. Some double oven models are equipped for Pure Convection on only one oven.
- When the oven is cooking, touching the **2** key on the number keypad, then **START**, tells the oven to raise the temperature by 25°F (15°C). Touching the **0** key on the number keypad, then **START**, tells the oven to lower the temperature by 25°F (15°C). In compliance with Jewish law, the bake elements will be adjusted randomly when these keys are touched and no changes will be seen on the display. On double ovens, you must touch the **BAKE** or **PURE CONV** key for the oven on which you want the temperature changed before touching the **0** or **2** key.

Adjusting the Oven Temperature

Even though your oven is adjusted at the factory to cook at the temperature shown on the display, it may cook faster or slower than your old oven.

⚠ WARNING

Do not adjust the probe or self-clean offset temperatures. The offset for the **PROBE** and **Self-clean** offsets must remain at 0 for proper and/or safe operation.

IMPORTANT: Do not measure the temperature inside the oven with a thermometer. Opening the door will cause an incorrect reading. Also, the temperature inside the oven will vary as the elements cycle on and off.

If you are not satisfied with the results from your oven, you can adjust the temperature offset as follows:

1. With the oven off, touch and hold the **0** and **#** keys on the number keypad at the same time. After about three seconds "**PASS**" will appear on the display.
2. Immediately enter **6428** on the number keypad, then **START**. "**SLCt**" (select) will appear on the display.
3. Touch the key for cooking mode you want to change the offset for (**CONV BAKE**, **CONV BROIL**, **PURE CONV**, **CONV ROAST**, **BAKE** or **BROIL**).

   The current offset temperature will appear on the display, for example "**00**", if you have not adjusted the temperature before.
4. Enter the amount you want to increase or decrease the temperature on the number keypad. To enter a minus sign, touch the **#** key after the number(s). A minus sign means that the oven will be cooler by the amount shown. When there is no sign in front of the number, the oven will be hotter by the amount shown. You may enter a number between 35°F or -35°F (18°C or -18°C). **NOTE:** "**Edit**" appears on the display when you start to enter the offset value.
5. Touch **START** to save the setting.
6. Repeat steps 3 to 5 above for any other cooking modes you need to offset.
7. Touch **CANCEL** to exit offset mode.

Cooking Tips

Food Placement

- Typically, when baking on two racks with your oven, use rack positions #3 and #5 (counting from the bottom up). When baking on three racks, use rack positions #2, #4 and #6.
- Turn pans on the racks so that the long sides run left to right, as you face them.
- When you are cooking a food item that is very heavy, use the Dacor GlideRack oven rack. You can pull it out further than a conventional rack, making it easier to check the food, stir or add ingredients.
- Heavier roasting pans and dishes will cook better on rack position #1.
- When using a baking stone, use rack position #3 for best results. If you put a baking stone on the GlideRack oven rack, instead of one of the standard oven racks, you can pull the stone out of the oven further, making pizza easier to remove.

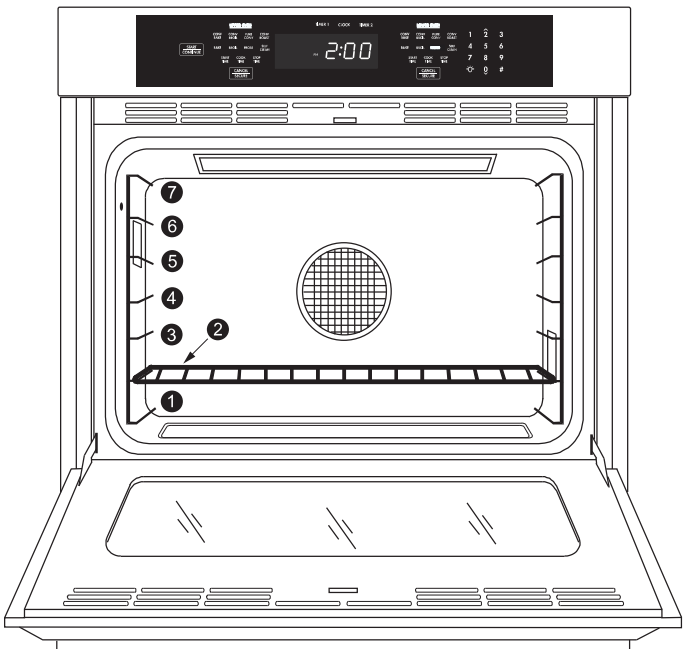

The Best Use of Bake Ware

- You should bake cakes, quick breads, muffins, and cookies in shiny, reflective pans for light, golden crusts. Avoid old, darkened, warped, dented, stainless steel and tin-coated pans. They heat unevenly and will not give good baking results.
- Use medium gauge aluminum sheets with low sides when preparing cookies, biscuits and cream puffs. Dacor cookie sheets, with their low profiles, will give you the best results.
- Bake most frozen foods in their original foil containers, placed flat on a cookie sheet. Follow the package recommendations.
- When using glass bake ware, reduce the recipe temperature by 25°F, except when baking pies or yeast breads. Follow the standard recipe baking time for pies and yeast breads.
- Use the pan size and type recommended by the recipe for best results.
- For roasting, Dacor's optional "V" shaped rack and broil/roast pan works best to allow air circulation around the food.
- Dacor's roasting pan works particularly well and two of them will fit side by side in a 30-inch oven.

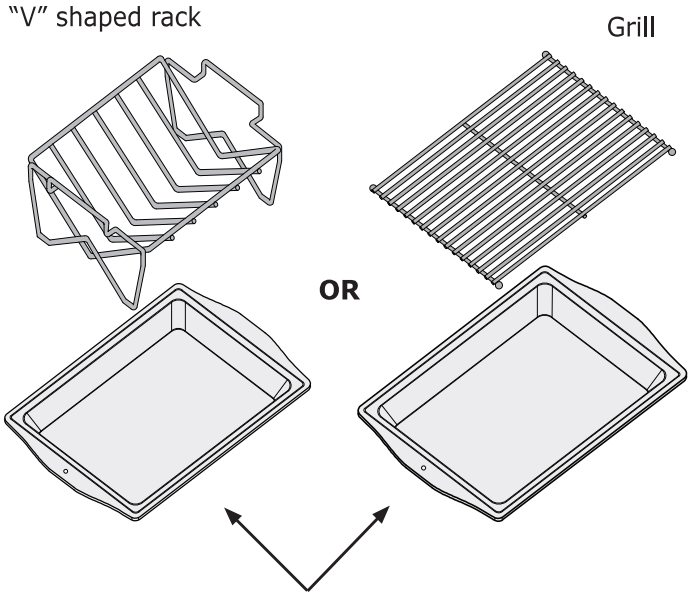

Optional Broil and Roast Pan Kit (AORPVR)

Cooking Tips

Time and Temperature Suggestions*

Food	Rack Position**	Cooking Mode	Temperature Setting	Cooking Time	Comments
Angel food cake	4	BAKE	325°F (163°C)	37 min.	
Apple pie, double crusted	3 and 5	BAKE	350°F (177°C)	30-45 min.	Use rack 3 for one pie, 3 and 5 when cooking two
Banana bread	3	CONV BAKE	325°F (163°C)	50 min.	Turn pan sideways on rack for more even cooking
Beef ribs, frozen	3	PURE CONV	350°F (177°C)	60 min.	
Beef tri-tip	2	CONV ROAST	375°F (191°C)	45 min.	
Biscuits, canned	4	BAKE	350°F (177°C)	15 min.	
Biscuits, homemade	4	PURE CONV	350°F (177°C)	50 min.	1 dozen on regular cookie sheet
Biscuits, frozen	4	BAKE	375°F (191°C)	25 min.	
Bread	4	CONV BAKE	325°F (163°C)	50-60 min.	
Brownies	3	PURE CONV	325°F (163°C)	20 min.	
Bundt cake	2	PURE CONV	325°F (163°C)	25 min.	
Cakes, white 2 (4)	2 (3/5)	PURE CONV	325°F (163°C)	22 (26) min.	
Cheesecake	3	CONV BAKE	300°F (149°C)	55 min.	Leave in oven for 45 minutes after cooking, then place in refrigerator for 2 hours.
Chicken, meat probe	2	PURE CONV	375°F (191°C)	-	Use meat probe set to 185°F (85°C)
Chicken	2	CONV ROAST	350°F (177°C)	80 min.	
Cinnamon rolls	4	PURE CONV	325°F (163°C)	24 min.	
Coconut macaroons	3	PURE CONV	300°F (149°C)	20 min.	
Coffee cake	3	PURE CONV	325°F (163°C)	55 min.	
Cookies, single sheet	4	PURE CONV	325°F (163°C)	14 min.	
Cookies, multiple sheets	3 and 5 or 2, 4 and 6	PURE CONV	325°F (163°C)	18 min.	
Corn bread	3	BAKE	375°F (191°C)	30 min.	
Cornish hens (3)	2	PURE CONV	375°F (191°C)		Use meat probe set to 180°F (85°C)
Crescent rolls	4 (3 and 5)	PURE CONV	350°F (177°C)	9½ (11) min.	
Cupcakes	3 (3 and 5)	PURE CONV	325°F (163°C)	15 (19) min.	
Fish fillets, fresh	4	CONV BROIL	500°F (260°C)	7 min.	4 min. on first side, then flip and cook for 3 min.

* Results may vary. Always check make sure food is properly cooked before consumption.

** Counting from the bottom up.

Cooking Tips

Time and Temperature Suggestions* (cont.)

Food	Rack Position**	Cooking Mode	Temperature Setting	Cooking Time	Comments
Flat bread	4	PURE CONV	375°F (191°C)	15 min.	
Garlic bread	3	CONV BROIL	555°F (291°C)	6 min.	
Hamburgers	4	BROIL	555°F (291°C)	7 min.	Fresh 1/4 lb. patties
Lasagna, frozen	3	CONV BAKE	375°F (191°C)	95 min.	
Macaroni and cheese (frozen)	3	CONV BAKE	375°F (191°C)	55 min.	
Meatloaf	4	CONV BAKE	325°F (163°C)	55 min.	2 lb meatloaf
Pie, frozen	3	BAKE	400°F (204°C)	65 min.	
Pies, frozen/ fresh (2)	4	PURE CONV	325°F (163°C)	80 min.	2, side by side
Pizza, fresh 16 inch	2 (2 and 5)	PURE CONV	375°F (191°C)	12 (15) min.	
Pizza, frozen	4	BAKE	400°F (204°C)	19 min.	
Pork loin chops	4	CONV BROIL	555°F (291°C)	12 min.	6 min. on each side for 1 inch thick chops
Potatoes, roasted	3	CONV BAKE	375°F (191°C)	35 min.	
Quiche	3	BAKE	350°F (177°C)	50 min.	
Roast beef	2	CONV BAKE	375°F (191°C)	-	Medium, use meat probe set to 165°F (74°C)
Salmon steaks	4	CONV BROIL	555°F (291°C)	10 min.	5 min. on each side
Sweet potato pie	4	BAKE	350°F (177°C)	60 min.	
Turkey, unstuffed	2	PURE CONV	350°F (177°C)	-	17 lb. turkey, use meat probe set to 185°F (85°C)
Turkey, stuffed	2	PURE CONV	325°F (163°C)	-	22 lb. use meat probe set to 185°F (85°C)
Yeast rolls	3	PURE CONV	325°F (163°C)	10 min.	

* Results may vary. Always check make sure food is properly cooked before consumption.

** Counting from the bottom up.

High Altitude Cooking

Due to the lower atmospheric pressure at higher altitudes, foods tend to take longer to cook. Therefore, recipe adjustments should be made in some cases. In general, no recipe adjustment is necessary for yeast-risen baked goods, although allowing the dough or batter to rise twice before the final pan rising develops a better flavor. Try making the adjustments below for successful recipes. Take note of the changes that work best and mark your recipes accordingly. You may also consult a cookbook on high altitude cooking for specific recommendations.

Altitude (feet)	Baking Powder for each teaspoon, decrease by:	Sugar for each teaspoon, decrease by:	Liquid, for each cup add:
3000	5-10%	10 - 25%	5-10%
5000	10%	10%	20%
7000	25%	20%	20 - 25%

⚠ WARNING

- Clean only the parts of the oven listed in this manual. Clean them only in the manner specified.
- To avoid dangerous fumes or damage to your oven's surfaces and accessories, use only the types of cleaning solutions specified in this manual.
- To avoid burns, turn off the oven(s) and make sure that all parts are cool before cleaning.
- To prevent damage, do not use abrasive or corrosive cleaners or applicators such as steel wool or scouring pads, on any part of the oven unless instructed to do so. Use only a sponge, soft cloth, fibrous or plastic brush or nylon cleaning pad for cleaning the surfaces of your oven.
- Do not use a steam cleaner to clean the oven. Steam could penetrate the electrical components and cause a short circuit.
- Do not try to remove heavy spills with a sharp object such as a knife or metal spatula. Sharp objects may scratch your oven's surfaces.

Your Oven's Self-clean Feature

About the Self-clean Cycle

- The oven will run better and produce better baked goods when it is clean. During self-cleaning, the oven is heated to very high temperatures which burn off any deposits on the surfaces of the oven. Self-cleaning eliminates the need for manual scrubbing of interior surfaces. The self-clean process takes about 2 1/2 hours.
- It is normal for the oven to emit smoke during the first few self-clean cycles. It is also normal for the oven to emit popping sounds during self-cleaning. These sounds are caused by the expansion and contraction of metal surfaces when the oven heats up and cools down.
- Self-clean mode will not function if the meat probe is connected.

⚠ WARNING

- Always wipe up excess grease and other food spills with a damp cloth prior to using the self-clean cycle. Doing so will minimize smoke and increase efficiency. See proper cleaning instructions on this page.
- Do not touch the outside surfaces of the oven during the self-clean cycle. They will be hot.
- Items left in the oven (including the racks) during self-cleaning will become damaged or damage the oven.

How to Use the Self-clean Feature

IMPORTANT

- On double ovens, the control panel will only allow one oven chamber to be self-cleaned at a time due to the amount of power consumed. Also, the double oven will not allow you to cook in one oven while the other is in self-clean mode.
- The oven lights do not operate while the oven is in self-clean mode to protect them from damage.
- Self-clean will not work with the meat probe connected (the meat probe symbol will flash).

1. Before self-cleaning the oven, remove the racks, the convection filter, all cookware (pots, pans, forks, etc.), the meat probe, foil and any other loose objects from the oven chamber. See page 27 for filter cleaning instructions.
2. Clean soil from the porcelain surfaces of the door outside of the door gasket. Rinse surfaces well with a solution of vinegar and water, then wipe dry. Heavily soiled areas may be cleaned with a non-scratching scouring pad.
3. Clean the door gasket by dabbing it with a solution of water and mild soap.

⚠ CAUTION

- Take extreme caution when cleaning the door gasket. Rubbing or displacing it may damage the tight door seal required for proper cooking and self-cleaning.
- Do not try to force the door open after it is locked. Damage to the door or latch may result.

4. Turn on kitchen fans or vents to help remove odors during the self-clean cycle.
5. Make sure the oven door is shut.
6. Touch the **Self-clean** key.
7. Touch the **START** key (located on the far left of the control panel).

The control panel automatically locks the oven door during self-cleaning. The latch prevents the door from being opened since the high interior oven temperatures can easily cause injury. If the door is not shut, an error message will appear on the display. To correct the problem, touch **CANCEL · SECURE** and wait approximately one minute, then close the door. When the door is properly closed, start the self-clean process again.

The display shows the self-clean cycle status:

- The clean symbol indicates that self-clean is in process.

- The lock symbol indicates that the door is latched.

- "**ON**" indicates that the heating elements are on.

continued...

Self-clean (cont.)

If you want to stop the self-clean cycle, touch the **CANCEL · SECURE** key. Keep in mind that the oven door will remain locked until it is safe enough to open. The lock symbol will disappear from the display when the door lock is released. You will still need to exercise caution when the door lock is released because the inside of the oven may still be hot.

After the self-clean cycle is complete...

- The door latch will release when the inside has cooled down. The clean icon, lock icon and "**ON**" will disappear from the display. Exercise caution because the oven will still be hot (about 400°F) at the time the door lock is released.
- Reinstall the convection filter and oven racks before using your oven.
- You may notice a powder ash residue in the bottom of the oven after self-cleaning. This condition is normal. Use a damp cloth or sponge to wipe up the residue after the oven cools down.

Self-cleaning Tips

- If any soil remains in the oven after the self-clean cycle is done, you may repeat the cycle if you want.
- Self-clean the oven regularly to prevent excessive soil build-up. Doing so will make the self-clean cycle work better and reduce smoke and odors.

Setting the Oven to Self-clean at a Later Time

1. Prepare the oven for self-cleaning as instructed on page 25. Observe all safety precautions and remove all items listed from inside the oven. Clean the door gasket and around the door as instructed.
2. Close the oven door.
3. Touch the **Self-clean** key.
4. Touch the **START TIME** key.
5. Enter the desired start time. For example, touch 1-2-3-0 for 12:30. You may enter a time up to 22 hours and 59 minutes ahead of the present time.
6. Touch **START**. When you touch **START**, "**DELAY**" will appear on the display and the oven door will lock. The oven will start to self-clean at the time selected.

When the oven is set to clean at a later time...

- If you want to view the time, push the **CLOCK** key.
- If the clock is displayed, you can push **START TIME** to check when the self-clean cycle will start.
- When the self-clean cycle starts, "**DELAY**" will disappear and "**ON**" will appear on the display.

To cancel the time delayed self-clean cycle...

- Touch **CANCEL/SECURE**.
- If the self-clean process has not started, allow about a minute for the door to unlock before attempting to use the oven.
- If the oven is in the middle of the self-clean process, the door will unlock when the oven has cooled down enough to open safely. The oven will still be hot (about 400 °F).

30 minute – Quick Steam Clean

The steam clean process is a quick, simple way to clean light soil inside the oven. Steam cleaning allows you to save time and energy over the self-clean process, which should be used for heavier soil build up. Also on double ovens, unlike the self-clean process, the quick steam clean process may be performed on both ovens at the same time.

⚠ WARNING

- To avoid steam burns, do not pour water into the oven when it is hot.
- The water remaining inside the oven will still be hot to the touch when the door is opened after the process.
- Do not use a temperature higher than 185°F (85°C).

1. Remove the oven racks and all utensils from the inside of the oven.
2. Making sure the oven is cool, pour 1 1/2 cups of water (preferably distilled) into the recessed portion of the oven floor. For slightly heavier build up, you may mix a teaspoon of hand dishwashing soap into the water prior to pouring.
3. Close the oven door, touch the **BAKE** key, then set the oven to 185°F (85°C). Touch **START**.
4. Set the timer (see page 15) for 20 minutes.
5. When the timer beeps, touch **CANCEL · SECURE**.
6. Wait 10 minutes before opening the door. When you open the door, there will usually be a large amount of steam, condensation and some water inside.
7. Using a soapy sponge, wipe down the inside of the door window first. Then carefully sponge out the remaining water from the inside of the oven.
8. Scrub the inside of the oven with the soapy sponge until grease and soil is remove from the surfaces inside. Lime deposits can be removed with a cloth soaked in vinegar.
9. Make sure all surfaces are dry after cleaning by wiping down the oven with paper towels. Leave the door partially open to allow any left over condensation to escape.

Repeat the process any time soil begins to build up inside.

Cleaning the Exterior

Control Panel

⚠ WARNING

Do not use abrasive cleaners or scrubbers on the control panel. They will permanently damage the finish.

To avoid accidentally turning the oven on while cleaning the control panel, activate the lock-out feature. Touch the **CANCEL · SECURE** key for six seconds. The lock-out feature disables the keys. When the control panel is locked, the word "**OFF**" appears on the display.

When you want to re-activate the control panel, touch **CANCEL · SECURE** for six seconds.

Clean the control panel with the soft side of a sponge dampened with a mild solution of detergent and warm water. Dry the control panel completely with a soft, lint-free cloth.

Stainless Steel Surfaces

⚠ CAUTION

Always wipe stainless steel (silver colored) surfaces with the grain. To prevent scratching, do not use abrasive cleaners or scrubbers on stainless steel surfaces.

Using a soft cloth, clean metal surfaces with a mild solution of detergent and warm water. Rinse and dry with a soft, lint-free cloth.

Glass (Interior and Exterior)

Use a mild glass cleaner to remove finger prints on glass surfaces. You can also clean glass surfaces with Dacor Cooktop Cleaning Creme. Use it according to the directions on the package.

You may scrub the oven light lens with the rough side of a sponge and warm, soapy water. Be careful not to scratch the lens.

Cleaning the Interior

Convection Filter

⚠ WARNING

For your safety and proper oven performance, re-install the filter before using the oven to cook. If you don't, the spinning fan blades at the back of the oven will be exposed.

The convection filter is located in the back of each oven chamber. Clean the filter regularly. If you allow it to become clogged, the oven's convection cooking modes will not work properly. You also need to remove the filter during the self-clean cycle.

Removing your oven's convection filter...

When the oven is cool, put your fingers around the edges of the filter and gently push up.

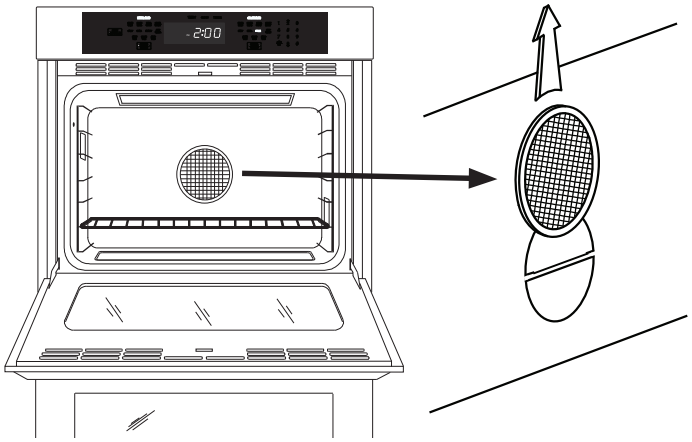

To clean the filter...

Soak it in hot, soapy water. Rinse well. You may also place it in a dishwasher on the top rack. Dry the filter before re-installing it.

Installing your oven's convection filter...

Carefully hook the metal clips on the back of the filter over the metal bar across the fan hole. Make sure it is centered over the hole. Be careful not to scratch the porcelain surfaces with the back of the filter.

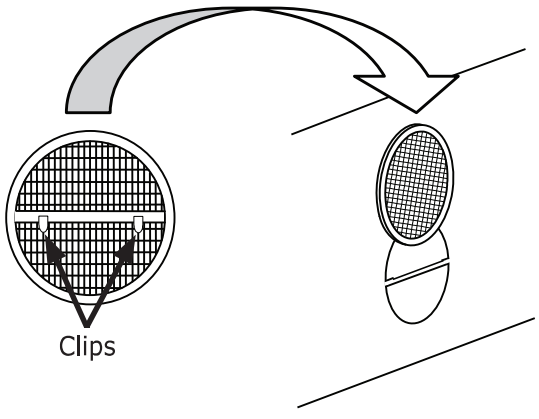

Cleaning the Interior (cont.)

Door Gasket (Seal)

⚠ WARNING

Take extreme caution when cleaning the door gasket. Rubbing or displacing it may damage the tight door seal required for proper cooking and self-cleaning.

Clean the door gasket by dabbing it with a solution of water and mild soap. Do not scrub it or it will become damaged.

Oven Racks

⚠ CAUTION

To prevent damage, do not self-clean the oven racks.

To clean the oven racks, apply a solution of detergent and hot water. When you need to clean heavy soil, use a scouring pad such as steel wool with plenty of water. You may also use a solution of one cup of ammonia to 2 gallons of water.

Meat Probe

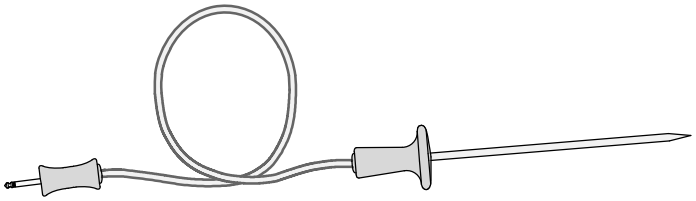

⚠ WARNING

- To prevent damage, do not immerse the meat probe in water.
- The meat probe will not function properly if the plug the connects to the oven is wet.

The meat probe is constructed of silicone handles, a wire, a plug and a stainless steel skewer. To clean the skewer, use a scouring pad and hot, soapy water. When you clean the handles, wipe them with a soft sponge soaked with a solution of detergent and warm water. Dry thoroughly.

Broil Pan

Your broil pan has a porcelain enamel finish. When you clean it, use a solution of detergent and hot water. If your broil pan is heavily soiled, use a scouring pad with plenty of water. Rinse it well after cleaning.

Optional Roast/Broil Pan with "V" Shaped Rack

Your roast/broil pan has a porcelain enamel finish. When you clean it, use a solution of detergent and hot water. If your roast/broil pan is heavily soiled, use a scouring pad and plenty of water. Rinse it well after cleaning.

The optional "V" shaped rack and grill are finished with an Excalibur nonstick coating. When you clean it, use a mild solution of detergent and warm water. Use the soft side of a sponge to scrub it and dry it with a lint-free cloth.

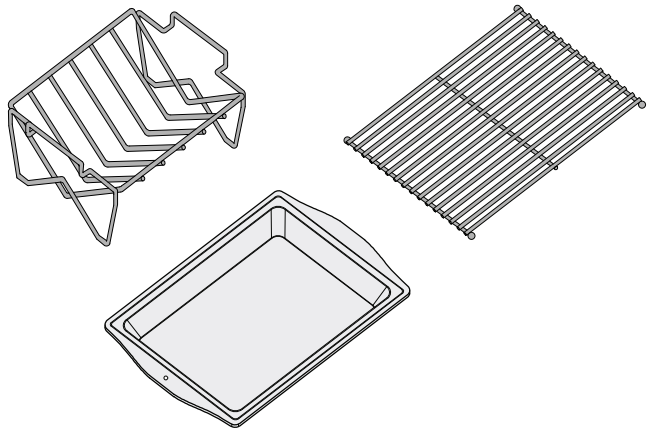

Optional Baking Stone

Wash the optional baking stone with hot water and scrub it clean before you use it for the first time. Do not use any soap or detergents to wash the stone. The stone is porous and soap will get trapped inside. The trapped soap will affect the flavor of the food cooked on it. Don't be alarmed if the stone gets stains on it after it is used for a while. Stains do not affect the stone's ability to bake properly.

When you need to remove large food particles from the baking stone, use warm water and a scrub brush. If there is a lot of oil build-up, it may smoke and create odors. If you need to remove the oily build up, use a scouring pad or brush to remove it. You may also use a paste of baking soda and water to scrub off small stains.

Optional Cookie Sheets

Clean the optional aluminum cookie sheets with a solution of detergent and warm water. Since aluminum can scratch, you need to use the soft side of a sponge. A way for you to keep cookie sheets cleaner is to use parchment paper over the cooking surface during baking. The parchment paper will also prevent food from sticking.

Care and Cleaning

Replacing the Light Bulbs

⚠ WARNING

- To prevent electrical shock and/or personal injury, make certain that the oven and light bulb(s) are cool and that power to the oven has been turned off at the main power supply before replacing the light bulb(s).
- Always make sure the lens covers are in place when using the oven(s). The lens covers protect the light bulbs from breakage caused by high oven temperatures or mechanical shock.
- Replacing the lens cover without lining up the cut-out with the light socket will damage the light fixture.
- Do not use a screwdriver to remove the lens.

Light bulb replacement is considered to be a homeowner maintenance operation. If the lights do not work, before replacing them, please consult the ***Problem Solution Guide*** on page 30.

IMPORTANT

Do not touch the replacement halogen light bulbs with your fingers. Halogen bulbs are sensitive to the oils from your hand. The oils from your hand will stick to the bulb and cause it to burn out faster than normal.

To replace the light bulbs...

1. Replace the light bulb only with Dacor part number 100429. See below for ordering information.
2. Turn off power to the oven at the circuit breaker panel or fuse box.
3. Hold your hand under the lens for support and gently pry it loose using a spatula or table knife. Pull the lens cover straight out.
4. Grasp the old bulb and pull it straight out of the socket.
5. Using a glove, insert the new bulb into the socket.
6. As you reinstall the lens cover, line up the cutout on the inside rim with the light socket. Gently press it into its original position.
7. Turn the power to the oven back on at the main power supply.
8. Reset the clock (see page 8).

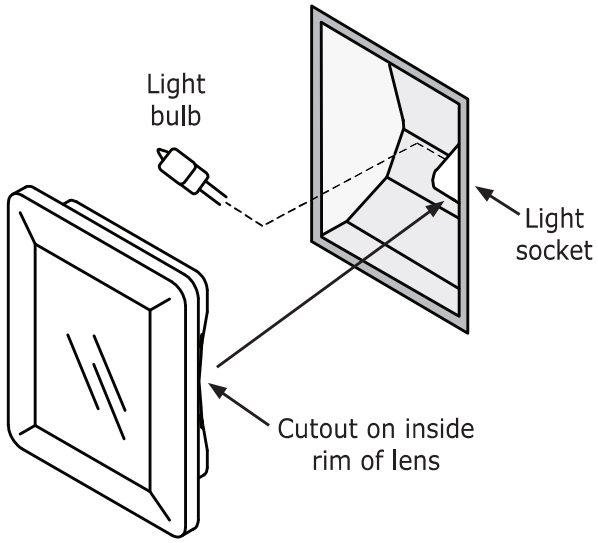

Part and Accessories

Description	Dacor Part Number
Halogen light bulb (12 Volt, 20 Watt)	100429
Meat probe	72723
Standard broil pan	82107
Grill for standard broil pan	82108
30 Inch standard type oven rack	106992
30 Inch GlideRack type oven rack	701464*, ARGO30H**
Large capacity roast/broil pan with "V" shaped rack	AORPVR
Pizza baking stone	ABS16
Cookie sheets, 30 inch*** (3 per carton)	AO303CS

* Use this number for ordering a replacement under warranty.

** Use this number for ordering additional racks, not covered under warranty.

*** Dacor full size cookie sheets maximize oven rack baking capabilities by utilizing the total usable rack space.

To order parts or accessories, contact your Dacor dealer or visit www.everythingdacor.com

Before You Call for Service

Problem Solution Guide

NOTE: See ***Common Problems When Using the Bake Mode*** on page 12 for problems with cooking food.

Problem	May Be Caused By	What to Do
Nothing works.	Oven not connected to electrical power.	Have a licensed electrician connect oven to properly wired electrical connection.
	Power to oven is off.	Turn on power at circuit breaker or fuse box. Check for tripped breaker or blown fuse.
	Control panel locked.	Touch **CANCEL · SECURE** key for 4 seconds to reactivate control panel
	Power outage.	Contact power company
Oven will not heat.	Oven setting not correct.	Touch **CANCEL · SECURE**, then follow instructions in Operating the Oven section.
	Oven set for delay timed cooking.	Oven will turn on automatically at the preset time. Touch **CANCEL · SECURE** to return to normal operation.
	Attempting to broil with the meat probe connected.	Broil and convection broil settings will not work when meat probe is connected. Disconnect meat probe.
Foods over or under cook.	Incorrect cooking time or temperature.	Follow instructions in ***Operating Your Oven*** section.
Oven shuts off by itself after it has been on for 12 hours.	12 hour timer is on. Unit is set to turn off automatically after 12 hours of continuous use.	Turn off 12 hour timer. See page 11.
Oven does not self-clean.	Oven door not shut tightly.	Check for obstructions. Shut door tightly.
	Oven set for delay timed cleaning.	Oven will start to self-clean at preset time. Touch **CANCEL · SECURE** to return to normal operation.
	Oven not set properly.	Follow instructions in ***Care and Cleaning*** section.
	Meat probe connected.	Oven will not start self-clean cycle when meat probe is connected. Disconnect and remove meat probe.
Oven door will not open.	Oven is set to self-clean.	Check display. If lock symbol appears on display, oven door cannot be opened. Wait for oven to complete self-clean or touch **CANCEL · SECURE**. Door will unlock once oven has cooled.
Oven lights will not work.	Oven in self-clean mode.	Lights do not work when oven is in self-clean mode. See page 25.
	Oven in Sabbath mode.	Lights do not work when oven is in Sabbath mode. See page 20.
	Light bulbs burned out.	Replace light bulbs.
Oven lights will not turn off.	Light key is set to on.	Touch light key to turn lights off.
Sabbath mode does not work.	Meat probe connected.	Oven will not start Sabbath mode when meat probe is connected. Disconnect and remove meat probe.

Before You Call for Service

Problem Solution Guide - (cont.)

Problem	May Be Caused By	What to Do
Oven goes into hold mode too quickly after meat probe is connected.	Meat probe connector is still wet after cleaning.	Dry the metal portion of the plug that connects to the oven using a soft dry rag.
Cooling fan continues to run after oven has been turned off.	Normal operation.	The cooling fan may run for a while after the oven is turned off, until the internal parts have cooled.
Time on display not correct.	Time of day not set.	Set time. See page 8.
	Power failure or power was turned off.	Reset time. See page 8.
Cannot set clock.	Oven in use. Clock cannot be set while oven is in use.	Turn off oven to set clock.
Time flashes on display.	Power failure or power was turned off.	Reset time. See page 8.
Control panel does not "beep" when touching the keys on the control panel and when the timer runs down to zero.	Control panel tone ("beep") is set to off.	Turn control panel tone ("beep") on. See page 8.
Error code appears and stays on display, for example "**U55**."	An error code having a letter with a number following it that appears and stays on the display indicates a problem that cannot be resolved by the customer.	Call for service.

Warranty and Service

Getting Help

Before you request service:

1. Review ***Before You Call for Service*** section of this manual (page 30).
2. Use the helpful tips found in our ***Problem Solution Guide.***
3. Become familiar with the warranty terms and conditions of your product on the following page.
4. If none of these tips or suggestions resolves your problem, call our Customer Service center at the number below.

Dacor's Customer Service center is available 6:00 A.M. – 5:00 P.M. Pacific Time

For warranty repairs or questions and for Dacor Distinctive Service (DDS) in the US and Canada
Phone: (800) 793-0093, extension 2822

For non-warranty repairs or questions in the US and Canada
Phone: (800) 793-0093, extension 2813

Contact us through our web site at:

www.dacor.com/contact-us

Warranty

What Is Covered

CERTIFICATE OF WARRANTIES: DACOR OVENS

WITHIN THE FIFTY STATES OF THE U.S.A., THE DISTRICT OF COLUMBIA, AND CANADA*:

FULL ONE-YEAR WARRANTY

The warranty applies only to the Dacor appliance sold to the first use purchaser, starting from the date of original retail purchase or closing date for new construction, whichever period is longer. Warranty is valid on products purchased brand new from a Dacor Authorized Dealer, or other seller authorized by Dacor.

If your Dacor product fails to function within one year of the original date of purchase, due to a defect in material or workmanship, Dacor will remedy it without charge to you.

All cosmetic damage (such as scratches on stainless steel, paint/porcelain blemishes, etc.) to the product or included accessories must be reported to Dacor within 60 days of the original purchase date to qualify for warranty coverage. Consumable parts such as filters and light bulbs are not covered and are the responsibility of the purchaser.

LIMITATIONS OF COVERAGE

Service will be provided by a Dacor designated service company during regular business hours. Please note service providers are independent entities and are not agents of Dacor.

Dealer display and model home display products with a production date greater than 5 years, products sold "As Is," and products installed for non-residential use, which include but not limited to religious organizations, fire stations, bed & breakfast, and spas carry a one year parts warranty only. All delivery, installation, labor costs, and other service fees are the responsibility of the purchaser.

Warranty will be null and void on product that has altered, defaced, or missing serial numbers and tags.

The owner must provide proof of purchase or closing statement for new construction upon request. All Dacor products must be accessible for service.

*Warranty is null and void if non-ETL or non-CUL approved product is transported from the U.S.A.

OUTSIDE THE FIFTY STATES OF THE U.S.A., THE DISTRICT OF COLUMBIA, AND CANADA:

LIMITED FIRST YEAR WARRANTY

If your Dacor product fails to function within one year of the original date of purchase due to a defect in material or workmanship, Dacor will furnish a new part, F.O.B. factory to replace the defective part.

All delivery, installation, labor costs, and other service fees are the responsibility of the purchaser.

What Is Not Covered

- Slight color variations may be noticed because of differences in painted parts, kitchen lighting, product placement, and other factors; this warranty does not apply to color variation.
- Service calls to educate the customer on proper use and care of the product.
- Service fees for travel to islands and remote areas, which include but not limited to, ferries, toll roads or other travel expenses.
- Consequential or incidental damage, including but not limited to food or medicine loss, time away from work or restaurant meals.
- Failure of the product when used for commercial, business, rental or any application other than for residential consumer use.
- Failure of the product caused by improper product installation.
- Replacement of house fuses, fuse boxes or resetting of circuit breakers.
- Damage to the product caused by accident, fire, flood, power interruption, power surges or other acts of God.
- Liability or responsibility for damage to surrounding property including cabinetry, floors, ceilings and other structures or objects around the product.
- Breakage, discoloration, or damage to glass, metal surfaces, plastic components, trim, paint or other cosmetic finish caused by improper usage, care, abuse, or neglect.

Out of Warranty

Should you experience a service issue beyond the standard warranty period, please contact us. Dacor reviews each issue and customer concern to provide the best possible solution based on the circumstances.

THE REMEDIES PROVIDED IN THE ABOVE EXPRESS WARRANTIES ARE THE SOLE AND EXCLUSIVE REMEDIES. THEREFORE, NO OTHER EXPRESS WARRANTIES ARE MADE, AND OUTSIDE THE FIFTY STATES OF THE UNITED STATES, THE DISTRICT OF COLUMBIA AND CANADA, ALL IMPLIED WARRANTIES, INCLUDING BUT NOT LIMITED TO, ANY IMPLIED WARRANTY OF MERCHANTABILITY OR FITNESS FOR A PARTICULAR USE OR PURPOSE, ARE LIMITED IN DURATION TO ONE YEAR FROM THE DATE OF ORIGINAL PURCHASE. IN NO EVENT SHALL DACOR BE LIABLE FOR INCIDENTAL EXPENSE OR CONSEQUENTIAL DAMAGES. IN THE EVENT DACOR PREVAILS IN ANY LAWSUIT, DACOR SHALL BE ENTITLED TO REIMBURSEMENT OF ALL COSTS AND EXPENSES, INCLUDING ATTORNEY'S FEES, FROM THE DACOR CUSTOMER. NO WARRANTIES, EXPRESS OR IMPLIED, ARE MADE TO ANY BUYER FOR RESALE.

Some states do not allow limitations on how long an implied warranty lasts, or do not allow the exclusion or limitation of inconsequential damages, therefore the above limitations or exclusions may not apply to you. This warranty gives you specific legal rights, and you may also have other rights that vary from state to state.

fold here

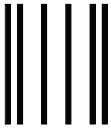

NO POSTAGE
NECESSARY
IF MAILED
IN THE
UNITED STATES

BUSINESS REPLY MAIL
FIRST-CLASS MAIL PERMIT NO 1600 CITY OF INDUSTRY CA

POSTAGE WILL BE PAID BY ADDRESSEE

DACOR
ATTN WARRANTY PROCESSING DEPT
PO BOX 90070
CITY OF INDUSTRY CA 91715-9907

dacor
The Life of the Kitchen.®

Please visit www.dacor.com to activate your warranty online.

WARRANTY INFORMATION

IMPORTANT:

Your warranty will not be activated until you activate it online or return this form to Dacor. If you have purchased more than one Dacor product, please return all forms in one envelope or activate the warranty for each product online.

Please rest assured that under no conditions will Dacor sell your name or any of the information on this form for mailing list purposes. We are very grateful that you have chosen Dacor products for your home and do not consider the sale of such information to be a proper way of expressing our gratitude!

cut here

Owner's Name: _____
Last (Please Print or Type) First Middle

Street: _____

City: _____ State: _____ Zip: _____

Purchase Date: _____ Email: _____ Telephone: _____

Dealer: _____

City: _____ State: _____ Zip: _____

Your willingness to take a few seconds to fill in the section below will be sincerely appreciated. Thank you.

1. How were you **first** exposed to Dacor products? (Please check one only.)

- ❑ A. T.V. Cooking Show
- ❑ B. Magazine
- ❑ C. Appliance Dealer Showroom
- ❑ D. Kitchen Dealer Showroom
- ❑ E. Home Show
- ❑ F Builder
- ❑ G. Architect/Designer
- ❑ H. Another Dacor Owner
- ❑ I. Model Home
- ❑ J. Other _____

2. Where did you buy your Dacor appliances?

- ❑ A. Appliance Dealer
- ❑ B. Kitchen Dealer
- ❑ C. Builder Supplier
- ❑ D. Builder
- ❑ E. Other _____

3. For what purpose was the product purchased?

- ❑ A. Replacement ***only***
- ❑ B. Part of a Remodel
- ❑ C. New Home
- ❑ D. Other _____

4. What is your household income?

- ❑ A. Under $75,000
- ❑ B. $75,000 – $100,000
- ❑ C. $100,000 – $150,000
- ❑ D. $150,000 – $200,000
- ❑ E. $200,000 – $250,000
- ❑ F. Over $250,000

5. What other brands of appliances do you have in your kitchen?

A. Cooktop _____ C. Dishwasher _____
B. Oven _____ D. Refrigerator _____

cut here

6. Would you buy or recommend another Dacor product?

❑ Yes ❑ No

Comments: _____

_____

_____

Thank you very much for your assistance. The information you have provided will be extremely valuable in helping us plan for the future and giving you the support you deserve.

Web site: www.dacor.com
Corporate phone: (800) 793-0093