Miele

ContourLine
Warming Drawers

ESW 6380 FB
ESW 6580
ESW 6780

Shown: ESW 6780

mieleusa.com

ContourLine Warming Drawer
ESW 6380 FB / ESW 6580 / ESW 6780

ESW 6380 FB
Features:

- Accomodates custom front panel
- Touch controls
- Fan-assisted heating system
- Time control, 4-hour timer
- Temperature settings from 104ºF to 185ºF
- Keeps food or plates and cups warm
- Non-slip liner
- Cool touch front
- Soft Open
- Auto Close
- Warm dishware for up to 12 people
- Sabbath Program
- Movable half rack insert allows food and dishware to be stored and warmed on two levels

Refer to page 7 for custom panel dimentions

ESW 6580
Features:

- Clean Touch Steel™ front with Comfort handle
- Touch controls
- Fan-assisted heating system
- Time control, 4-hour timer
- Temperature settings from 104ºF to 185ºF
- Keeps food or plates and cups warm
- Non-slip liner
- Cool touch front
- Soft Open
- Auto Close
- Warm dishware for up to 12 people
- Sabbath Program
- Movable half rack insert allows food and dishware to be stored and warmed on two levels

ESW 6780
Features:

- Touch controls
- Fan-assisted heating system
- Time control, 4-hour timer
- Temperature settings from 104ºF to 185ºF
- Keeps food or plates and cups warm
- Non-slip liner
- Cool touch front
- Soft Open
- Auto Close
- Warm dishware for up to 12 people
- Sabbath Program
- Movable half rack insert allows food and dishware to be stored and warmed on two levels
- Comfort handle provides smooth, clean lines

Comfort Handle:
Optional with ContourLine

(DS 6708 Item #09828380)

ComfortSwivel Handle:
Standard with ContourLine
Optional for PureLine
(DS 6718 Item # 09828390)

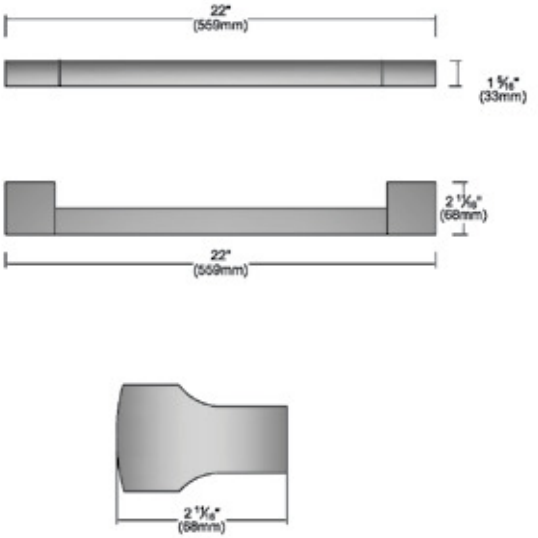

Silhouette Handle:
Standard with Pureline
Optional for Contourline
(DS 6808 Item # 09828400)

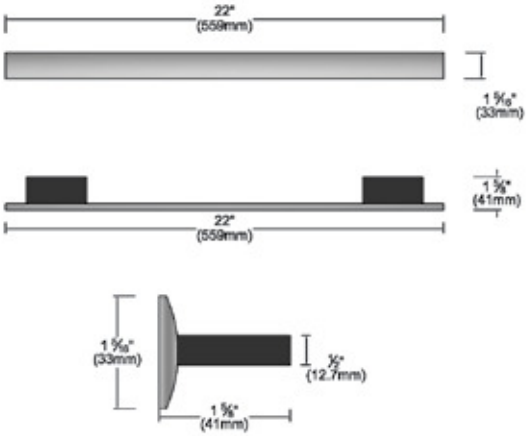

Silhouette Handle (Chrome):
Standard with BrilliantWhite
(DS 6808 Item # 09828410)

Silhouette Handle:
Standard with Truffle Brown
(DS 6808 Item # 09870690)

ContourLine Warming Drawer
ESW 6380 FB / ESW 6580 / ESW 6780

SPECIFICATIONS	
ESW 6380 FB - Item # 30638052USA	
ESW 6580 - Item # 30658052USA	
ESW 6780 - Item # 30678052USA	
Overal Unit Width - Excluding Fascia Dimension	25 15/16" (659mm)
Overall Height - Excluding Fascia Dimension	10 9/16" (268mm)
Overall Depth - Excluding Fascia Dimension	23 7/8" (606mm)
Overall Fascia Dimensions	29 13/16" (757mm) W x 10 13/16" (275mm) H x 1" (262mm) D
Built-In	
Minimum Cabinet Width	26 5/16" — 28 1/2" (724mm)
Minimum Cabinet Depth	24" (610mm)
Minimum Cabinet Height	10 5/8" (270mm)
Minimum Base Support	63 lbs
Minumum Shelf Spacing Between Stacked Product	3/4" (19mm)
Additional Cut-outs Required	No
Electrical	
Electrical Requirements	120V 15A 60 Hz
Power Cord	Molded NEMA 5-15 plug This appliance is equipped with a 5 ft (1.5 m) long power cord with a three-prong grounding plug ready for connection to a 120V, 15A, 60Hz power supply.
Cut Out for Power Cord	Yes
Electrical Rating	120V, 15A 60Hz, .72kW (120V)
Total Amps	6A on 120V
Shipping	
Shipping Weight	70 lbs
Shipping Dimensions	32 7/8" W x 14 3/8" H x 29 7/8" L
Support	
Call	800.843.7231
20/20	2020technologies.com

INSTALLATION SPECIFICATIONS

Solo Install

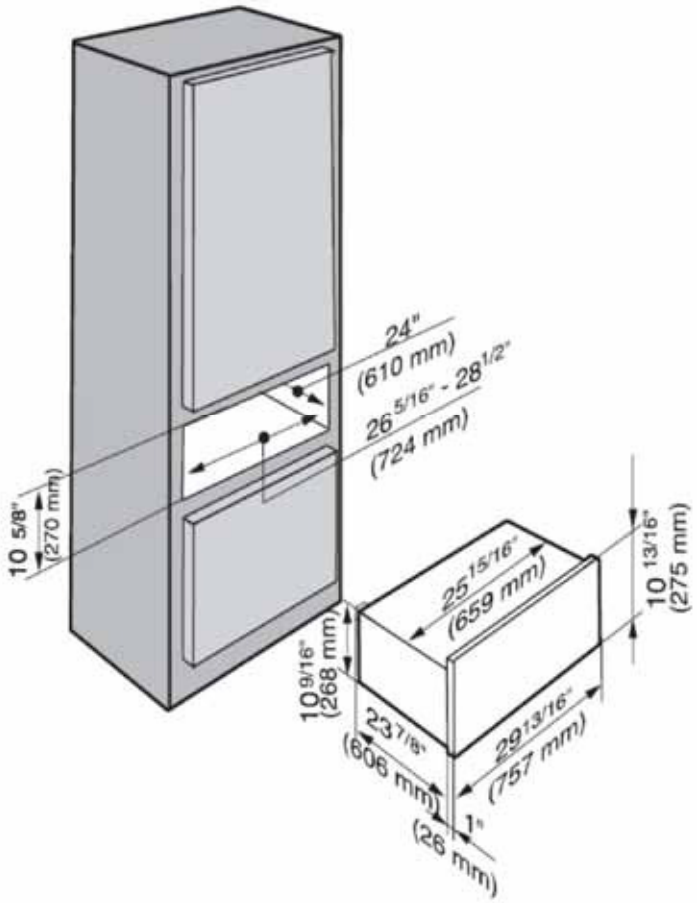

Install with 30" Oven

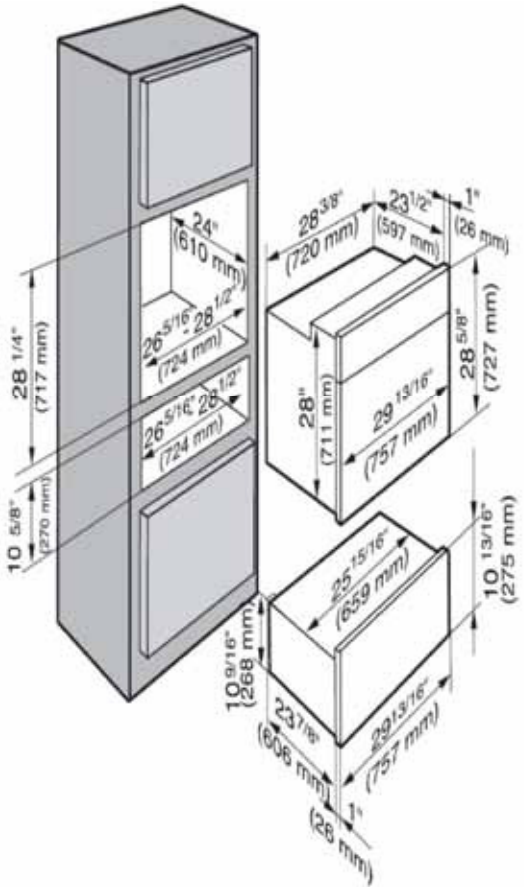

INSTALLATION SPECIFICATIONS

Side View

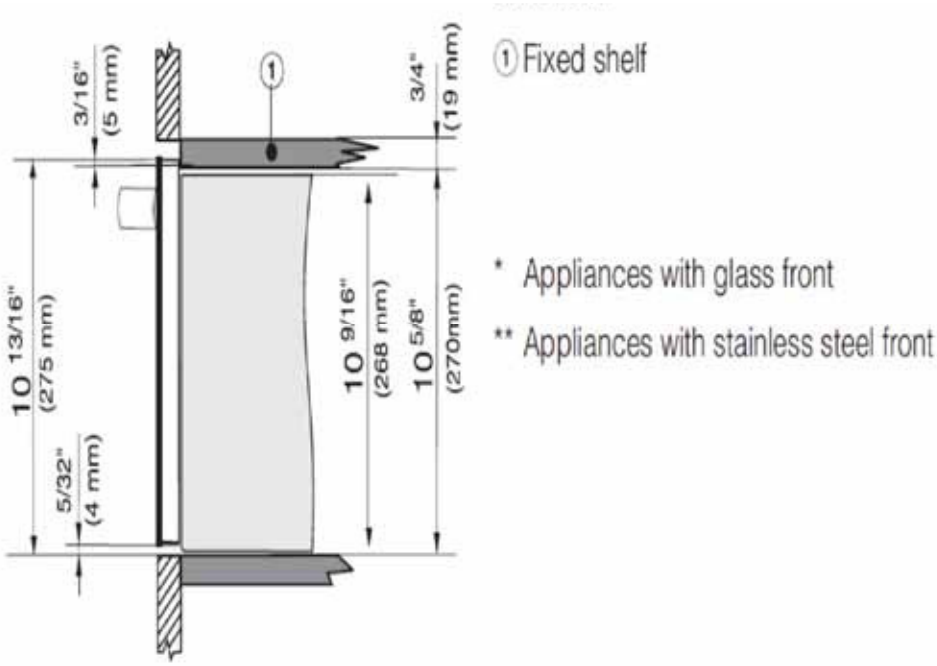

Side View with Oven

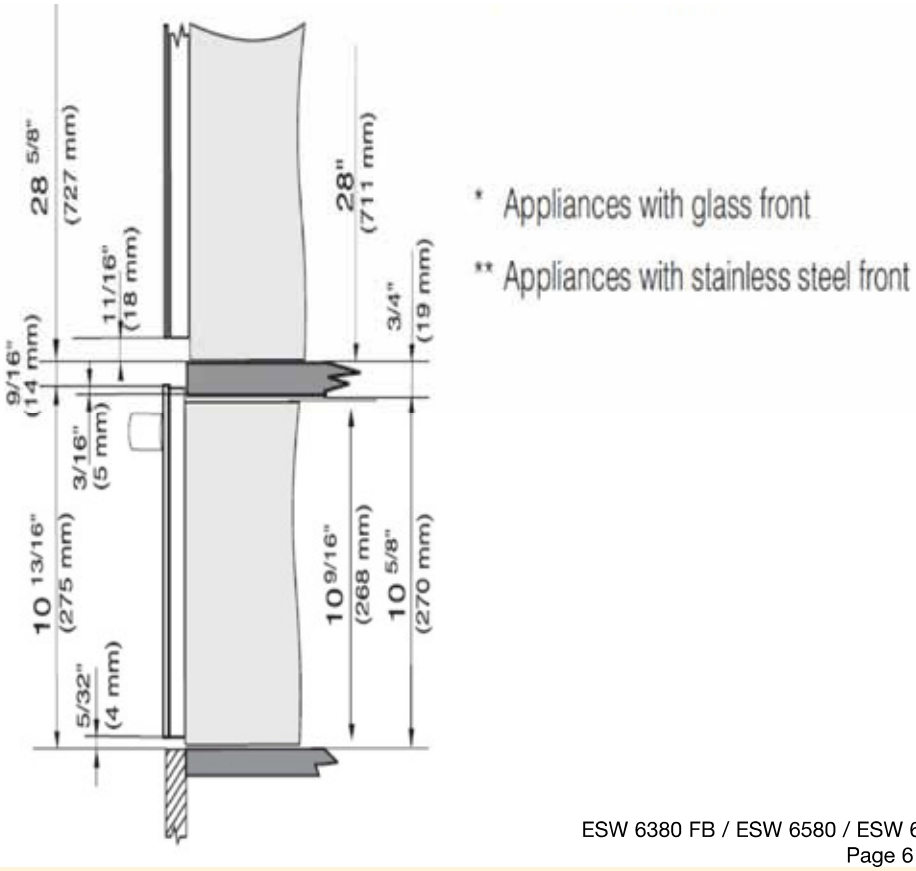

INSTALLATION SPECIFICATIONS

FB Panel Information

The front panel must be at least 3/4" (19 mm) thick and made of heat resistant material 140° F (60° C). The front panel, including handle, must not exceed 11 lb (5 kg) in weight.

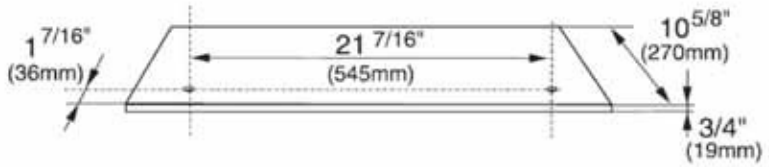

remove the panel from the front of the drawer.

- Pre-drill the custom front panel (see illustration).
  ∅ 3/8" (10 mm), t = 3/8" (10 mm)