# MARSALA METAL VANITY STOOL

*Model #50981*



Examine all packaging material for small parts that may have come loose during shipment. Periodic checks are recommended to insure that all components are in proper position, tight and free from damage. Keep this assembly instruction for future reference. Adult assembly is required. The product of Hillsdale Furniture, LLC is designed for residential use only. Customer Service Phone Number: 502-562-0000

### HARDWARE LIST

A (6) 1/4" x 15mm Allen Bolts
B (8) 1/4" x 15mm Sunk Bolts
C (2) 1/4" x 20mm Allen Bolts
D (4) Φ6.5 Spring Washers
E (4) Φ6.5 x 1.5 Flat Washers
F (4) Wood Screws
G (1) Allen Wrench

### PARTS LIST

H (1) Stool Back
I (1) Seat
J (4) Legs
K (1) Leg Support
L (1) Seat Cushion

| PART | QTY | HARDWARE | PART | QTY | HARDWARE |
|---|---|---|---|---|---|
| A | 6 | | B | 8 | |
| C | 2 | 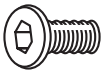 | D | 4 | |
| E | 4 | | F | 4 | |
| G | 1 | | | | |

### STEP 1 - Figure 1

Begin assembly by attaching Legs (J) to Seat (I) using 2 Sunk Bolts (B) per leg. Do not tighten bolts at this time.

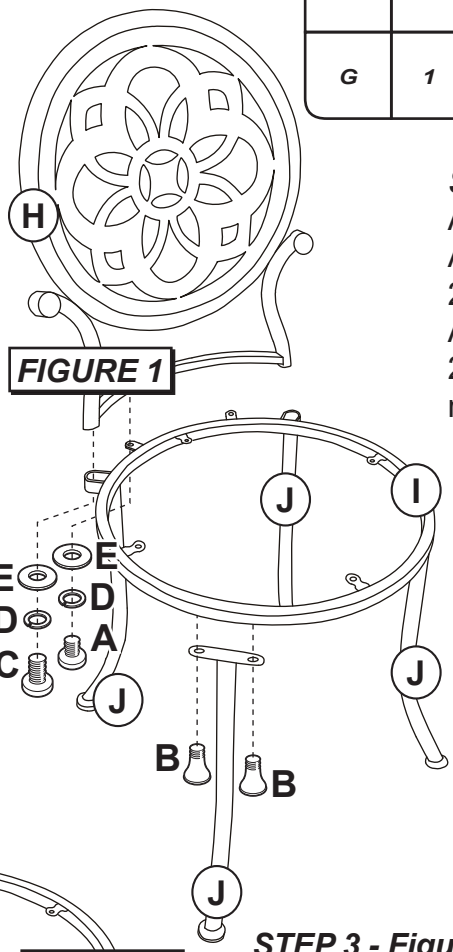


FIGURE 1

### STEP 2 - Figure 1

Attach Stool Back (H) to Seat (I) using 2 Allen Bolts (A), 2 Spring Washers (D) and 2 Flat Washers (E) from the inside and 2 Allen Bolts (C), 2 Spring Washers (D) and 2 Flat Washers (E) from the outside. Do not tighten bolts at this time.

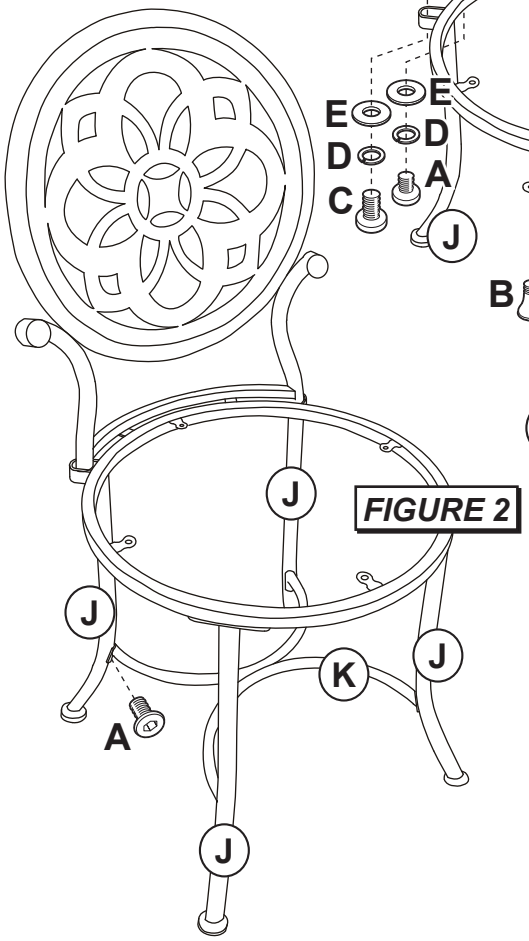


FIGURE 2

### STEP 3 - Figure 2

Attach Leg Support (K) to Legs (J) using 1 Allen Bolt (A) per leg. Tighten all bolts from steps 1 - 3 with Allen Wrench (G) provided.

### STEP 4 - Figure 3

Attach Seat Cushion (L) to Seat (I) using 4 Wood Screws (F). Tighten screws with Philips head screwdriver (not included). The assembly is now complete.

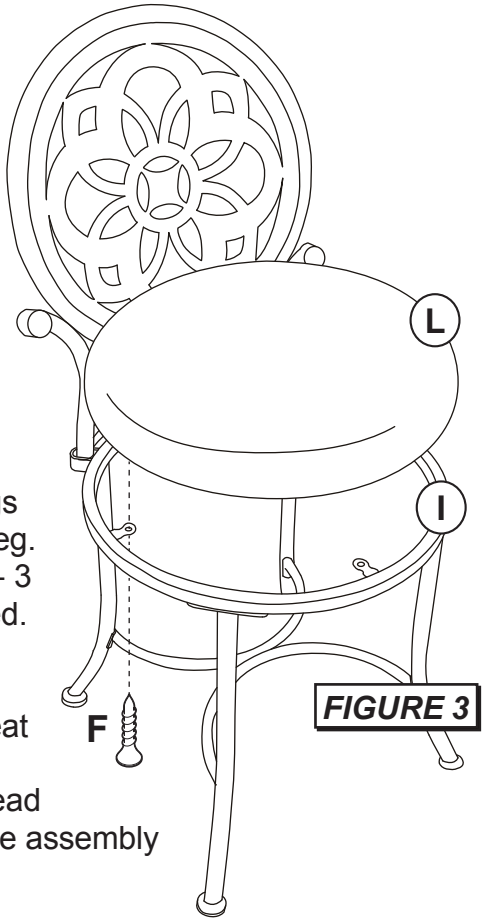


FIGURE 3

**CARE & MAINTENANCE:** The touch of a soft cloth is all the maintenance the finish will ever need. Please do not use harsh or abrasive cleaners for polishing, as they may cause damage to the finish. Periodic checks are recommended to make sure that all hardware is securely tightened.