GTX18ESSJ

GE® 6.0 cu. ft. capacity Dura Drum electric dryer

Dimensions and Installation Information (in inches)

Electric Dryer Rating:			
240V	5600W	24A	60Hz
208V	4400W	22A	60Hz

Exhaust Option: 4-way rear, right, left and bottom

Circuit Requirements: An individual, properly-grounded branch circuit, protected by a 30-amp circuit breaker or a time-delay fuse, is required.

Note: Dryer wall outlet must be located within 36" of service cord entry and acessible when dryer is mounted in position.

Installation Information: For complete information, see installation instructions packed with your dryer.

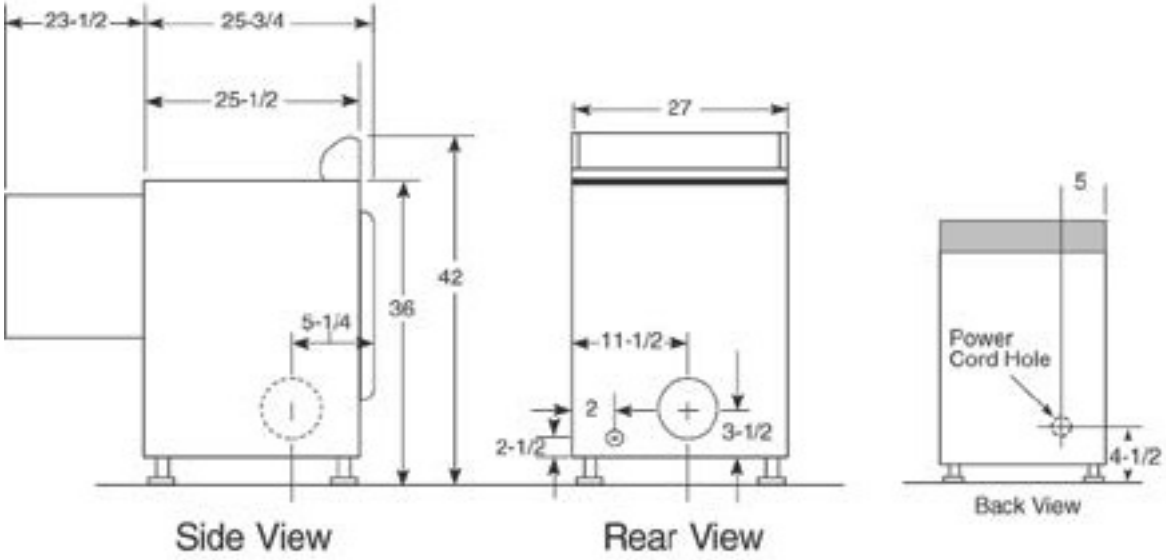

Special Installation Requirements

Alcove or Closet Installation:
- If your dryer is approved for installation in an alcove or closet, it will be stated on a label on the dryer back.
- The dryer MUST be exhausted to the outside.
- Minimum clearances between dryer cabinet and adjacent walls or other surfaces are: 0" either side; 3" front and rear
- Minimum vertical space from floor to overhead cabinets, ceilings, etc. is 52".
- Closet doors must be louvered or otherwise ventilated and must contain a minimum of 60 sq. in. of open area equally distributed. If this closet contains both a washer and a dryer, doors must contain a minimum of 120 sq. in. of open area equally distributed.
- No other fuel-burning appliance shall be installed in the same closet with a gas dryer.

Bathroom or Bedroom Installation:
- The dryer MUST be exhausted to the outdoors.
- The installation must conform with the local codes, or in the absence of local codes, with the National Electric Code and National Fuel Gas Code, ANSI Z223 for gas dryers.

Minimum Clearances other than Alcove or Closet Installation:
- Minimum clearances to combustible surfaces are: 0" both sides; 3" rear

Dryer Exhausting Information: Use metal duct only, vertical and horizontal ducting.

For answers to your Monogram,® GE Profile™ or GE® appliance questions, visit our website at geappliances.com or call GE Answer Center® service, 800.626.2000.

imagination at work

Listed by Underwriters Laboratories

Specification Created 8/14

GTX18ESSJ

GE® 6.0 cu. ft. capacity Dura Drum electric dryer

For complete information, see installation instructions packed with your dryer.

Ducting Materials:
For best performance, this dryer should be vented with 4" diameter all rigid metal exhaust duct. If rigid metal duct cannot be used, then UL-listed flexible metal (semi-rigid) ducting can be used (Kit WX08X10077). In special installations, it may be necessary to connect the dryer to the house vent using a flexible metal (foil-type) duct. A UL-listed flexible metal (foil-type) duct may be used ONLY in installations where rigid metal or flexible metal (semi-rigid) ducting cannot be used AND where a 4" diameter can be maintained throughout the entire length of the transition duct. Please see installation instruction packed with your dryer for complete instructions when using flexible metal (foil type) ducting.

Exhaust Length Calculation:

1. Determine the number of 90° turns needed for your installation. If you exhaust to the side or bottom of dryer, add one turn.
2. The maximum length of 4" rigid (aluminum or galvanized) duct which can be tolerated is shown in the table. A turn of 45° or less may be ignored. Two 45° turns within the duct length should be treated as a 90° elbow. A turn over 45° should be treated as a 90° elbow.

Dryers **must** be exhausted to the outside.

Caution: For personal safety do not terminate exhaust into a chimney, under any enclosed house floor (crawl space), or into an attic, since the accumulated lint could create a fire hazard or moisture could cause damage. Never terminate the exhaust into a common duct or plenum with a kitchen exhaust, since the combination of lint and grease could create a fire hazard.

Exhaust ducts should be terminated in a dampered wall cap to prevent back drafts, bird nesting, etc. The wall cap must also be located at least 12" above the ground or any other obstruction with the opening pointed down.

For more information on venting kits and accessories, please call 1-800-GE-CARES.

imagination at work

Dryer exhausting information—use metal duct only vertical and horizontal ducting

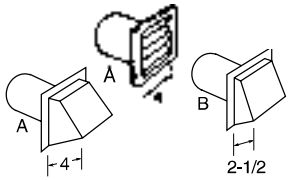

Domestic dryer models	Number of 90° turns	Best performance: Maximum length of 4" dia **rigid metal** duct — Exhaust hood type **A** 4" opening	**B** 2-1/2" opening
GE Frontload Long Vent 7.0 cu. ft. capacity electric dryer (GFDL)	0	200 ft.	175 ft.
	1	185 ft.	165 ft.
	2	175 ft.	155 ft.
	3	165 ft.	145 ft.
	4	155 ft.	135 ft.
	5	145 ft.	125 ft.
All Long Vent 6.0 - 8.0 cu. ft. capacity electric & gas dryers (GTDL)	0	150 ft.	125 ft.
	1	135 ft.	115 ft.
	2	125 ft.	105 ft.
	3	115 ft.	95 ft.
	4	105 ft.	85 ft.
	5	95 ft.	75 ft.
All 6.0 - 8.3 cu. ft. capacity models electric and gas dryers (GFDS, GFDR, GFDN, GTDS, GTDN, GHDN, GHDS, GTDP, GLDP, GTDX, HTDP, HTDX)	0	90 ft.	60 ft.
	1	60 ft.	45 ft.
	2	45 ft.	35 ft.
	3	35 ft.	25 ft.
	4	25 ft.	15 ft.
DCVH480	0	90 ft.	60 ft.
	1	60 ft.	45 ft.
	2	45 ft.	35 ft.
	3	35 ft.	25 ft.
All 3.6 cu. ft. (DSKS, DSKP) electric dryers	0	46 ft.	37 ft.
	1	37 ft.	30 ft.
	2	30 ft.	22 ft.
	3	23 ft.	15 ft.
Laundry Center GTUP270, GTUN275	0	56 ft.	42 ft.
	1	48 ft.	34 ft.
	2	40 ft.	26 ft.
	3	32 ft.	18 ft.
Laundry Center GTUP240	0	43 ft.	36 ft.
	1	33 ft.	26 ft.
	2	24 ft.	16 ft.

For every extra 90° elbow, reduce the allowable vent system length by 10 ft.
Two 45° elbows will be treated like one 90° elbow.
For the side exhaust installations, add one 90° elbow to the chart.
The total vent system length includes all the straight portions and elbows of the system (transition duct included).
Laundry Center length includes factory-installed elbow that does not impact vent length.

Specification Created 8/14

GTX18ESSJ

GE® 6.0 cu. ft. capacity Dura Drum electric dryer

Features and Benefits

- Dura Drum interior provides long-lasting dependability
- 4 heat selections provide the right temperatures for your clothes-drying needs
- Quick Fluff delivers ready-to-go results in minutes without heat
- End-of-cycle signal - Alerts you when the load is done, so clothes can be removed before wrinkles set in
- Auto Dry monitors air temperature to set dry times
- Model GTX18ESSJWW – White

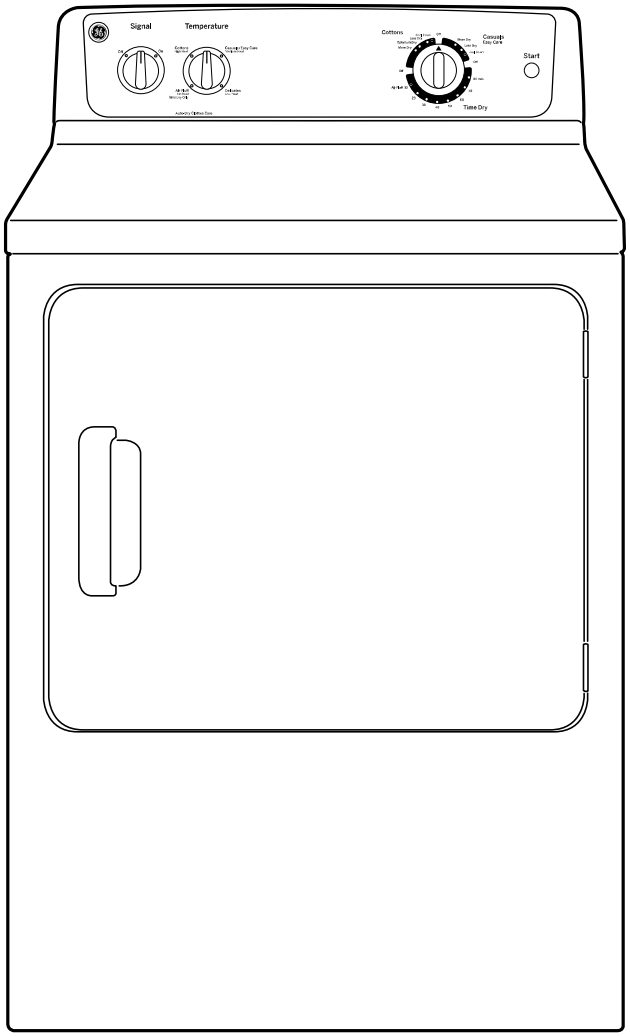

imagination at work

Specification Created 8/14