Electrolux | ICON®

Gas Slide-In Cooktop

professional series

E36GC76PPS

PRODUCT DIMENSIONS

Width	35-7/8"
Depth	25"
Height	7-3/4"

MORE EASY-TO-USE FEATURES

Sealed Power Burners

Black Ceramic Glass Cooking Surface

Pilotless Ignition

A.D.A. Compliant
When properly installed, this model is A.D.A.-qualified based on the United States Access Board's A.D.A./ A.B.A. Accessibility Guidelines and the Department of Justice's 2010 A.D.A. Standards for Accessible Design.

BURNER	BTU
Right Front	20,000 – 1,100
Right Rear	9,500
Left Front	20,000
Left Rear	14,000
Center Front	14,000
Center Rear	5,000 – 1,500

Signature Features

Min-2-Max Burners®
With the widest range of BTU performance in the industry, these best-in-class dual-flame sealed burners offer unrivaled versatility — from a roaring 20,000-BTU boil to a gentle 1,100-BTU simmer.

Continuous Grates
Designed for cooking multiple dishes at varying temperatures on a single cooktop, continuous grates allow you to move even the heaviest pots and pans from burner to burner with the utmost ease.

Professional-Style Controls
Large 270 degree knobs give you precise control while cooking, so you get the results you want.

Versatile Cooking Accessories
Interchangeable accessories include a griddle plate, a special wok ring and simmer plate — so you can customize the cooktop to fit your cooking needs.

Gas Slide-In Cooktop

E36GC76PPS professional series

Electrolux | ICON®

36" GAS SLIDE-IN COOKTOP	
Configuration	6 Sealed Burners
FEATURES	
Formed Stainless Steel Platform	Yes
Professional-Style Controls	Yes
Min-2-Max Burners® (BTU)	2 (20,000 – 1,100)
Sealed Power Burner™ (BTU)	2 (14,000)
Sealed Burner (BTU)	1 (9,500)
Sealed Precision Burner™ (BTU)	1 (5,000 – 1,500)
Linear Flow Burner Valves	Yes
Electronic Pilotless Ignition	Yes
Continuous Grates	3
A.D.A. Compliant*	Yes
ACCESSORIES	
Griddle	Included
Wok Ring	Included
Simmer Plate	Included
LP Gas Conversion Kit	Included
9" Stainless Steel Backguard – PN # 903048-9010	Optional
Depth Adjustment Filler Kit** – PN # 903051-9010	Optional
SPECIFICATIONS	
Gas Inlet/Power Supply Location	Right Rear
Voltage Rating	120V/60Hz
Connected Load (kW Rating) @120 Volts‡	0.12
Electrical Cable	Included
Approved for Single Oven Combination Installation***	No
Shipping Weight (Approx.)	120 Lbs.

*When properly installed, this model is A.D.A.-qualified based on the United States Access Board's A.D.A./A.B.A. Accessibility Guidelines and the Department of Justice's 2010 A.D.A. Standards for Accessible Design.

**When replacing an existing cooktop with countertop cutout deeper than 7-1/4" and less than 8-1/2", order free Depth Adjustment Filler Kit.

***Not approved to be used over any Electrolux ICON® Single Wall Oven.

‡For use on adequately wired 120V, dedicated circuit having 2-wire service with a separate ground wire. Appliance must be grounded for safe operation.

NOTE: Always consult local and national electric and gas codes. Refer to Product Installation Guide for detailed installation instructions on the web at electroluxicon.com.

Specifications subject to change.

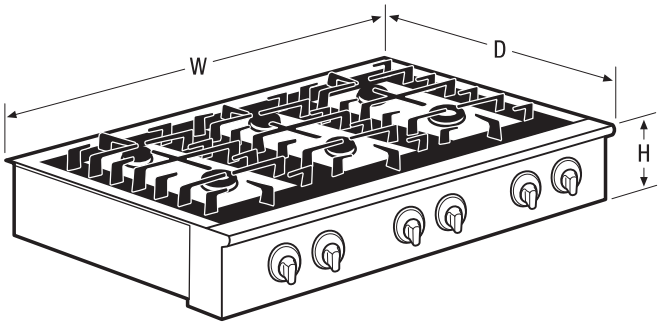

NOTE: Always consult local and national electric and gas codes. Refer to Product Installation Guide for detailed installation instructions on the web at electroluxicon.com.

C SP® US

PRODUCT DIMENSIONS	
Width	35-7/8"
Depth	25"
Height	7-3/4"

Electrolux Major Appliances, N.A.

USA • 10200 David Taylor Drive • Charlotte, NC 28262 • 1-877-4electrolux (1-877-435-3287) • electroluxicon.com
CANADA • 5855 Terry Fox Way • Mississauga, ON L5V 3E4 • 1-800-265-8352 • electroluxicon.ca

High standards of quality at Electrolux Home Products, Inc. mean we are constantly working to improve our products. We reserve the right to change specifications or discontinue models without notice.

© 2014 Electrolux Home Products, Inc.