*** Try these other fine ELK products ***

Magic Module Series

MM443	Magic Module, 4 Input, 4 Output, Programmable
MM447	Automation Controller w/Voice,Caddx Interface
MV480	Recordable Voice Module, 400 Channels
MKHOME1	Home Control Kit for Caddx NX Controls
MK400	Starter Kit, Includes MM443 & MK485
MK485	Programming Kit, MB485, Cables, Software
MK410	X-10® Transceiver Kit, Programmed MM443
MK420	iButton™ Access Kit w/ MM443, MA100, MA101
MA100	iButton™ 'Touchkey' Reader & Interface Pack
MA101	iButton™ 'Touchkeys',10 pcs w/keyring holders
MA290	Proximity / Wiegand Data Interface to MM443
MB485	Data Bus Interface, RS232 to RS485
MC100	Clock / Calendar Module for MM443
ML8	Link Interface to Caddx NX Controls
MT100	Temperature Sensor Module for MM443
MM220	Magic Module, 2 Input, 2 Output, Programmable

Rust Free Sirens / Speakers

1RT	Speaker & Stainless Steel Enclosure
150RT	Siren & Stainless Steel Enclosure
155RT	Voice Siren in Stainless Steel Box

Speakers & Sirens

44	Speaker, 30 W,8 Ohm Compact Horn
45	Siren, Compact Horn, 118db
55	Voice Siren, Compact Horn
M120	Siren, Single Tone, 107db, Mini Horn
SP15	Speaker, 15 watt, Small Horn
SP30	Speaker, 30 watt, Horn
SP35	Speaker, 20 watt, Interior
SP40	Speaker, 40 watt, Horn
SS15	Siren, Dual Tone, 110db, Horn
SS30	Siren, Dual Tone, 120db, Horn
SS36	Siren, Dual Tone, 105db, Interior

ECHO™ Sirens & Speakers

73	ECHO Speaker, 20 Watt, Interior
74	ECHO Dual Tone Siren, Interior
75	ECHO Voice Siren, Interior
870	ECHO Speaker, Self Amplified

Siren & Voice Drivers

100	High Performance Siren Driver
110	Voice Siren Driver, English & Spanish
120	Recordable Voice Module and Siren
124	Recordable Voice Module, 4 Channels

Surge Suppressors

950	Surge Suppressor, Phone & Power Line
951	Surge Suppressor, Phone - Single Line
955	Surge Suppressor, Phone - Dual Line

Relay Modules

912	Compact Relay,12 Vdc, SPDT
912B	Heavy Duty Compact Relay,12/24 Vdc, SPDT
924	Sensitive Relay, 12/24 Vdc, DPDT
941	Alarm Output Director
960	Delay Timer Relay, 1 sec. to 60 min.

Power Products

1240	Battery, Lead Acid, 12v, 5Ah
1270	Battery, Lead Acid, 12v, 8Ah
12100	Battery, Lead Acid, 12v, 12Ah
12170	Battery, Lead Acid, 12v, 18Ah
12250	Battery, Lead Acid, 12v, 25Ah
P112	12 Volts DC, 1 Amp Power Supply w/Enclosure
P124	24 Volts DC, 800mA Power Supply w/Enclosure
P1216	12 Volts DC, 1.5 Amp Power Supply
P412	12 Volts DC, 4 Amp Power Supply
P624	Power Supply & Battery Charger
PD9	Power Distribution Module
965	Low Battery Cutoff and Power Switch
TRG1640	Transformer, 16.5VAC @ 40 VA
TRG2440	Transformer, 24VAC @ 40 VA

Accessories

129	Computer Sound Card Interface
800	Audio Amplifier, 10 Watts
900-2	"B" Connectors,Unfilled,500 pcs
902-2	"B" Connectors,Gel filled,500 pcs
980	Telephone Line Fault Monitor
998	Warning Alarm System Decals
999	Double Sided Tape
SL1	Strobe Light, 4 colors available
WK1	Wall Mount Kit for SL1 Strobes

For more information contact your local Distributor or:
ELK PRODUCTS,INC **828-397-4200** FAX 828-397-4415
http://www.elkproducts.com Email: info@elkproducts.com
05/02

Doorbell & Telephone Ring Detector ELK-930

APPLICATION:

The ELK-930 performs three (3)functions. It can detect ring activation from one or two doorbell buttons and a single telephone line. It conveniently isolates the voltage and current and produces an open collector (pull to ground) output which can be used to trigger an automation controller, relay, timer, etc. The circuit is pre-scored so that the individual detectors may be snapped off (separated) from each other.

ELK PRODUCTS, INC.

Doorbell & Telephone Ring Detector ELK-930

7 62158 00930 3

FEATURES:

Doorbell

- Detects Doorbell Activation Current.
- Inputs for Two Separate Pushbutton Locations.
- No Interference With Lighted Pushbuttons.
- Produces an Open Collector Output.
- Powered by the Doorbell Transformer.

Telephone

- Detects Telephone Ringing Voltage.
- Provides an Open Collector Output that follows the ringing pattern.

- Lifetime Limited Warranty, call for details

SPECIFICATIONS:

- Max Input on Doorbell Boards: 24 Volts A.C.
- Max Output : 40mA @ 12 Volts D.C.
- Doorbell Detection Current: 900mA min.
- Total Dimensions: 3.4" x 2.75" x .625".

Features and Specifications subject to change without notice.

ELK PRODUCTS, INC.
828-397-4200 Voice
828-397-4415 Fax
http://www.elkproducts.com
email: info@elkproducts.com
PO Box 100 • Hwy. 70W • Hildebran, NC 28637 • USA

Instructions Printed On Inside

INSTALLATION

The ELK-930 doorbell detector monitors the current draw of a doorbell and produces an open collector output when the pushbutton is pressed and the doorbell draws 900mA or more. This open collector output can be used to trigger an automation controller input that utilizes high to low switching (pull to ground) for activation. There are two basic installation methods:

Method 1 requires only 1 of the ELK-930 doorbell detectors and free access to the wires leading from the doorbell transformer. The ELK-930 will activate when the doorbell rings, regardless of a single pushbutton or two (front door, back door) pushbuttons.

1. Mount the ELK-930 at any convenient location along the path of the two wires leading from the transformer to the doorbell.
2. Cut one of the two transformer wires. Strip the ends and place one under each of the doorbell detector INPUT terminals.
3. Run a two conductor wire from the doorbell detector output terminals to the automation controller or device to be activated.
4. Connect one wire from the "NEG" terminal to a common NEG terminal of the controller. Connect the other wire from the "OUT" terminal to one of the input zones on the controller.

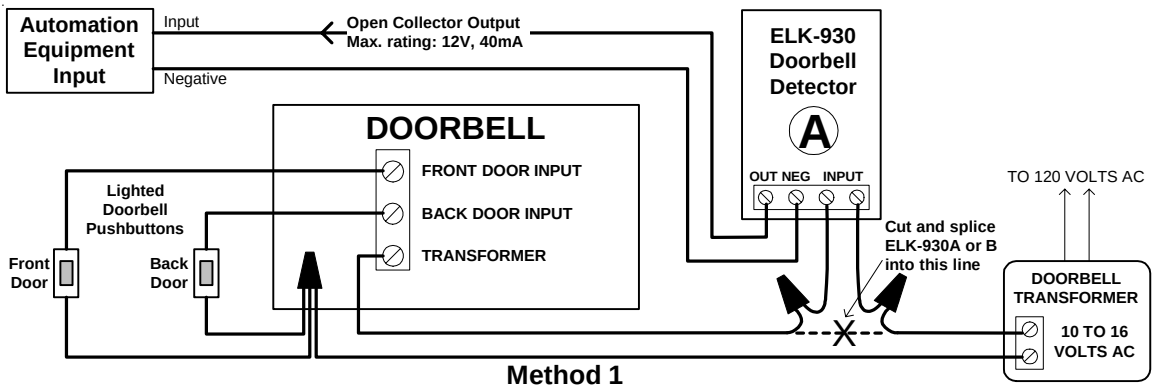

Method 1

Method 2 requires both ELK-930 doorbell detectors and free access to both of the pushbuttons wires. Detector A will activate when the front door pushbutton is pressed and Detector B will activate when the back door pushbutton is pressed.

1. Mount the ELK-930 near the Automation Equipment.
2. Run a four conductor wire to the doorbell location.
3. Connect one pair of the four conductor to the INPUT terminals on Detector A and the other pair to the INPUT terminals on Detector B. At the doorbell location splice one pair of the four conductor in series between the front door wire and the transformer common. Splice the other pair between the back door wire and the transformer common.
4. For each doorbell detector connect one wire from the "NEG" terminal to a common NEG terminal of the controller. Connect the other wire from the "OUT" terminal to one of the input zones on the controller.

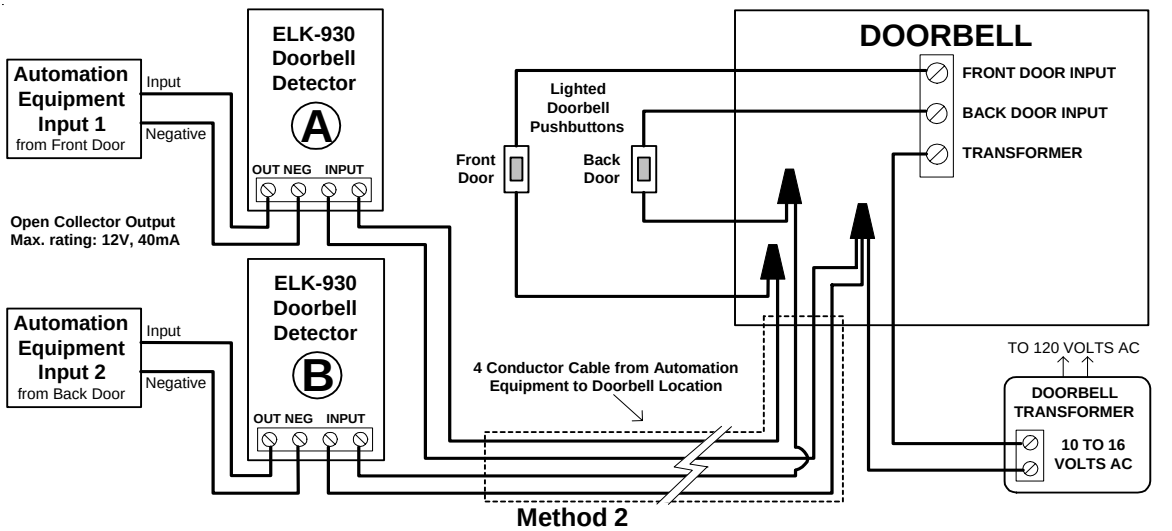

Method 2
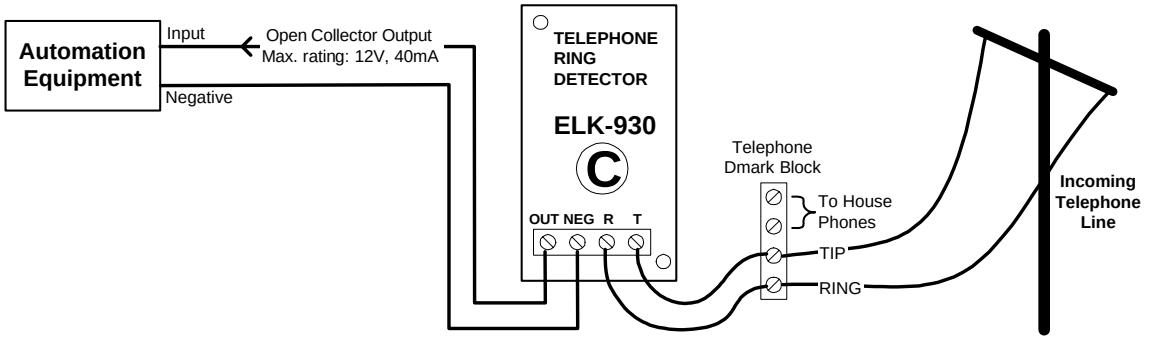
The ELK-930 telephone ring detector monitors the voltage on the telephone line and produces an open collector output (pull to ground) when the telephone ringing voltage is approximately 50 Volts or greater. The output follows the ringing pattern.