PRODUCT SPECIFICATIONS

PROFESSIONAL SERIES METAL LINERS

HOOD SHELL
OPTIONS SHOWN

PM028ML

PM034ML
PM040ML (+6": 3" filler per side)

PM046ML
PM052ML (+6": 3" filler per side)

PM058ML
PM064ML (+6": 3" filler per side)
PM070ML (+10": 5" filler per side)

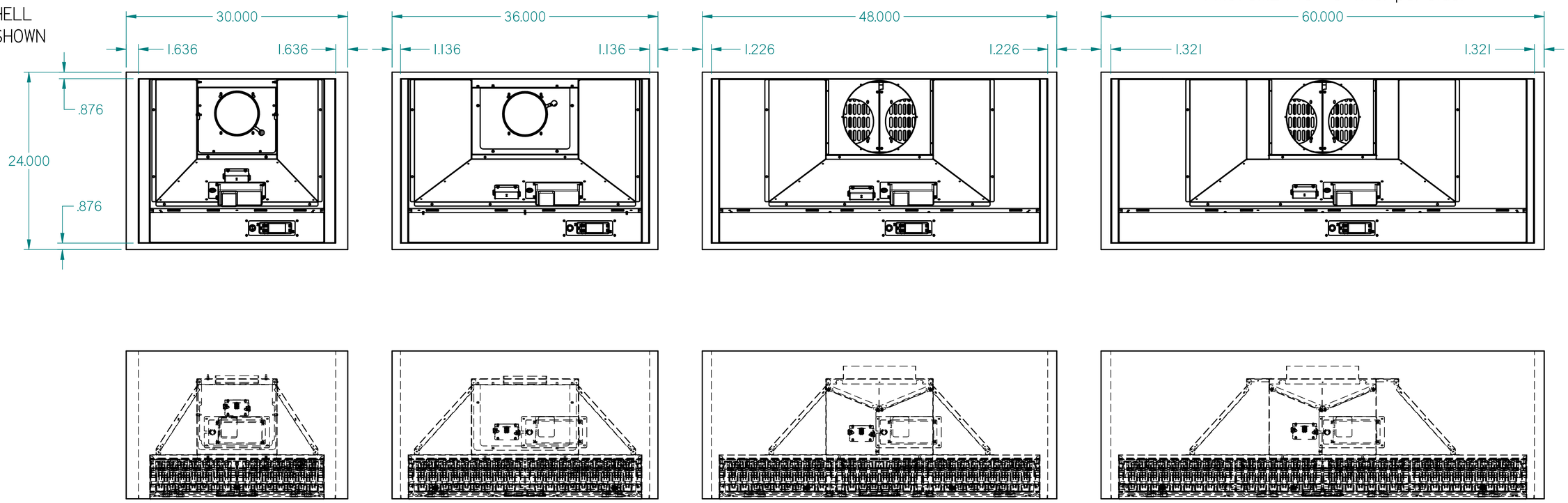

RECOMMENDED OPENING AND GAPS TO CUSTOM HOOD SHELLS

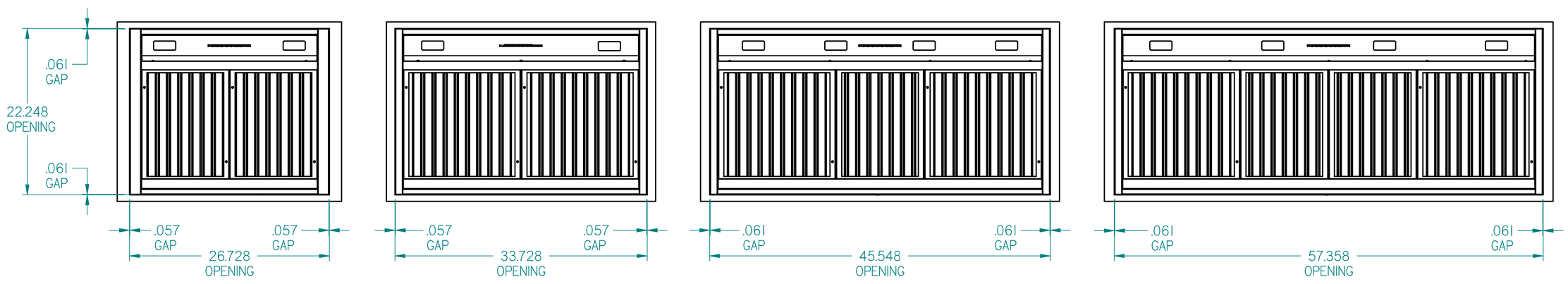

HOOD DIMENSIONS - 4 standard width models shown

PM028ML

PM034ML
PM040ML (+6": 3" filler per side)

PM046ML
PM052ML (+6": 3" filler per side)

PM064ML (+6": 3" filler per side)
PM070ML (+10": 5" filler per side)

HOOD SHELL REMOVED

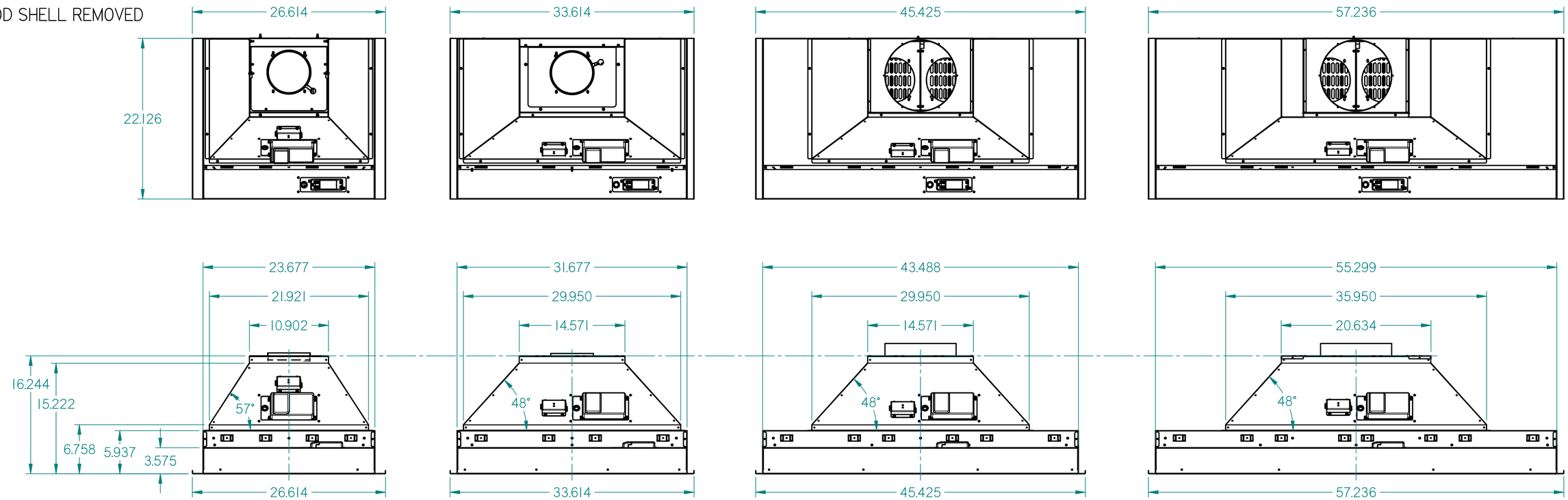

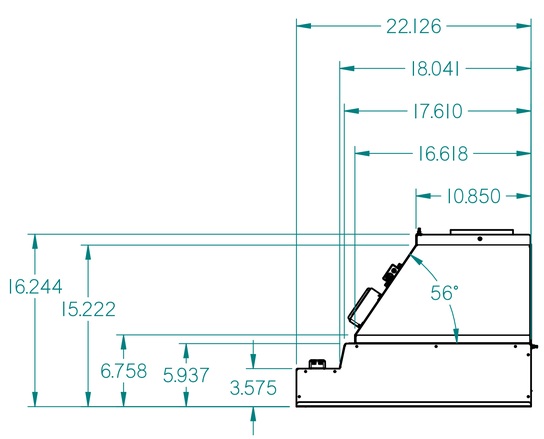

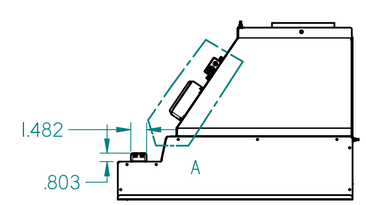

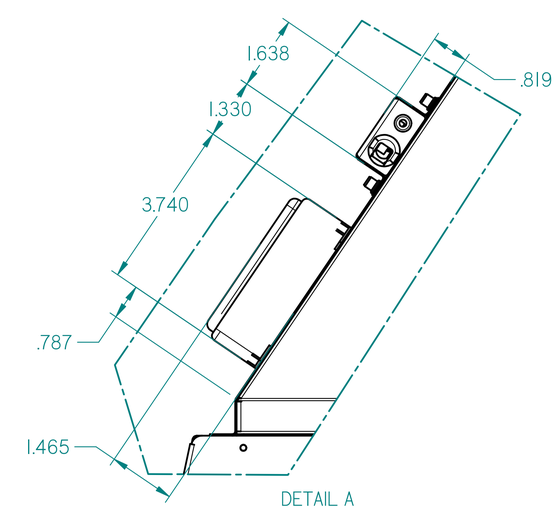

HOOD BLOWER DISCHARGE

TOP VIEW | RIGHT SIDE | BACK VIEW | ISO VIEW TOP/BACK/LEFT

TOP DISCHARGE
6" DUCT FOR:
- IN-HOOD 600 cfm BLOWER

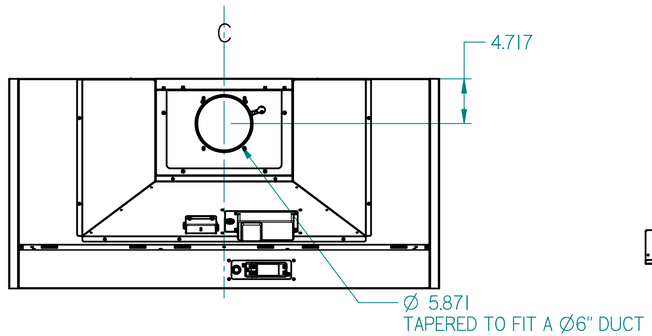

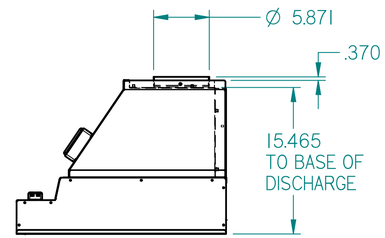

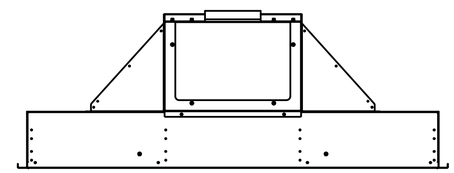

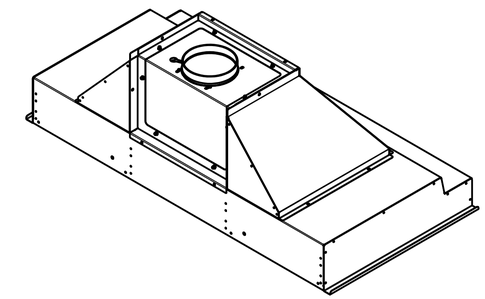

REAR DISCHARGE
6" DUCT FOR:
- IN-HOOD 600 cfm BLOWER

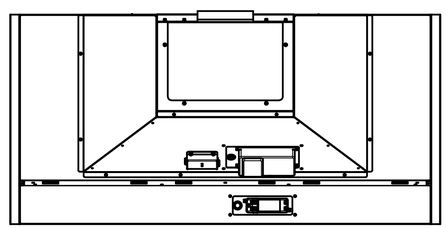

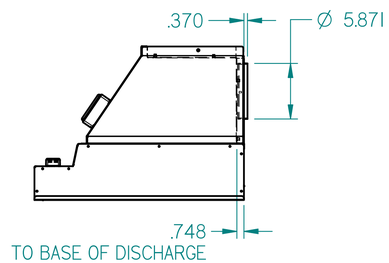

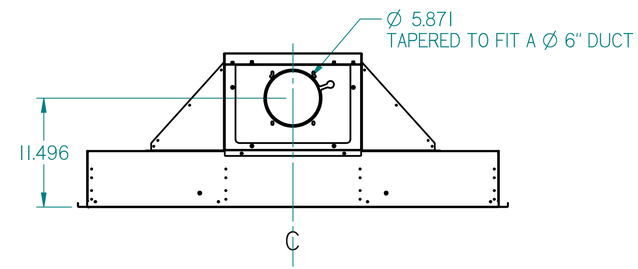

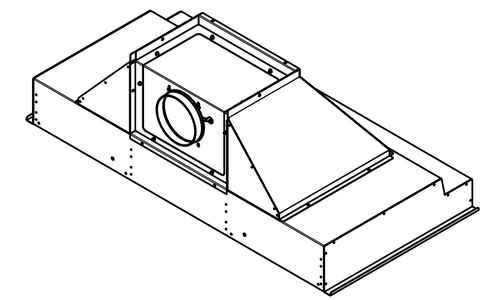

TOP DISCHARGE
10" DUCT FOR:
- IN-HOOD 1200 cfm BLOWER
- REMOTE BLOWER
- IN-LINE BLOWER

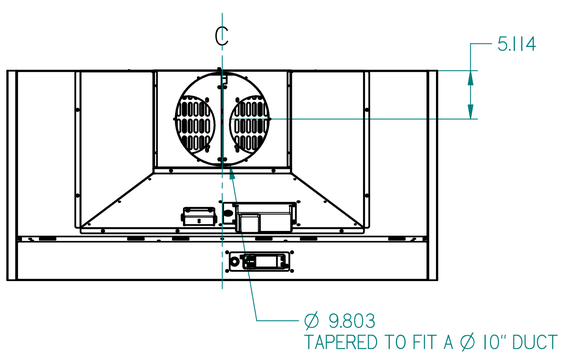

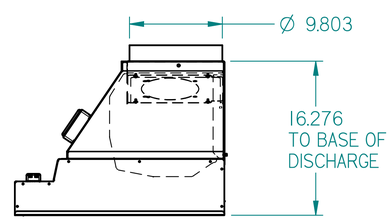

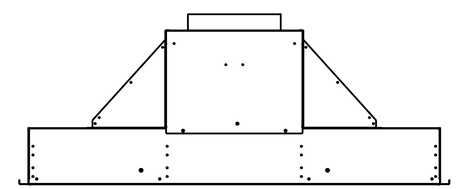

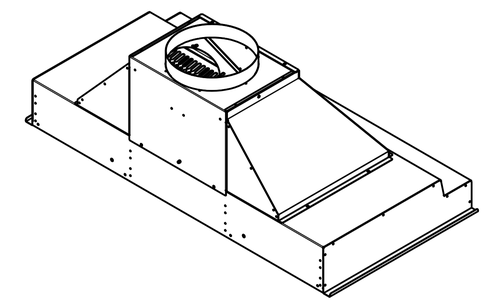
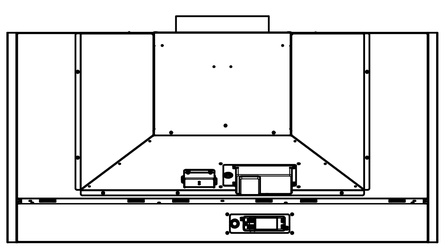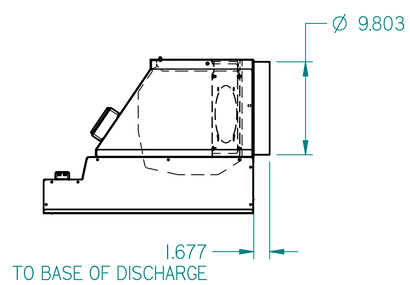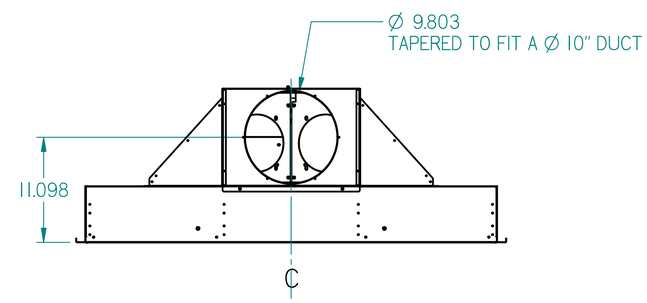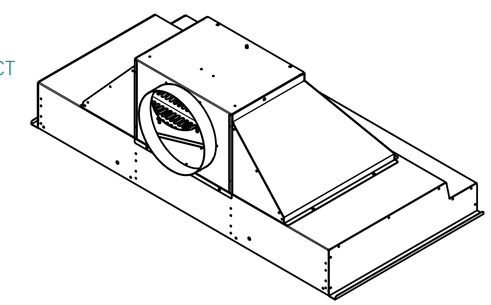
REAR DISCHARGE
10" DUCT FOR:
- IN-HOOD 1200 cfm BLOWER
- REMOTE BLOWER
- IN-LINE BLOWER