Furniture of America®

E-Commerce by Enitial Lab

ASSEMBLY INSTRUCTIONS

MODEL #

FOA5789-TV

Questions?

GIVE US CALL: 1-888-980-5122
MON-FRI 8:30AM - 5:30PM (PST)

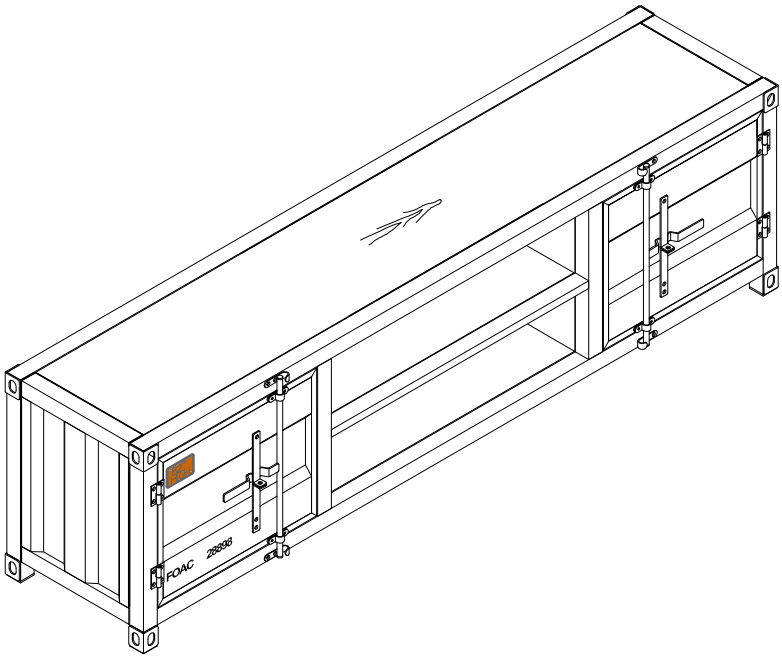

TOOLS REQUIRED

Allen Wrench

(Included)

Phillips Screwdriver

(Not Included)

2 - People Recommended

ASSEMBLY RATING

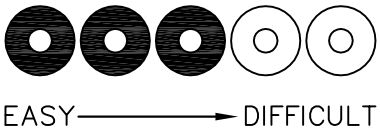

The Assembly Rating is a 5-point system showing the level of effort needed to assemble a specific product.

VERSION # 20-10-14

Furniture of America®

FOA Intro

Thank you for your purchase!

We hope you enjoy this new addition to your home for many years to come.

Our commitment to providing quality products does not simply end when you purchase our product. We fully stand behind our products from start to finish. Our customer service department is available Monday – Friday 8:30 AM – 5:30 PM Pacific and can help with assembly questions as well as, if necessary, replacing damaged or missing parts. To help expedite our service, please have these assembly instructions readily available, along with your order receipt.

Consumer Hotline
Toll-Free 1-888-980-5122

Monday to Friday
8:30AM- 5:30PM (PST)

WEBSITE
www.foagroup.com

E-MAIL
cs.ec@foagroup.com

foagroup

FurnitureOfAmerica

CHECK BEFORE STARTING

Are you missing anything?

Double-check all parts, hardware and accessories listed on Page 6 are accounted for.

Should we send any replacements?

Are there any irregularities or flaws in the parts? We can send replacements!

Check out our Quick Tips!

We recommend reviewing the pre-assembly handouts. Even experts need a refresher now and then!

Prep Time!

Please review the assembly instructions and all diagrams prior to assembling. Arrange parts as recommended on Page 7 and group identical hardware together to make assembling easier.

PRE ASSEMBLY INTRODUCTION

We understand building ready-to-assemble furniture can be a challenging experience for some. To help avoid confusion, we have provided some helpful tips that may speed up the process.

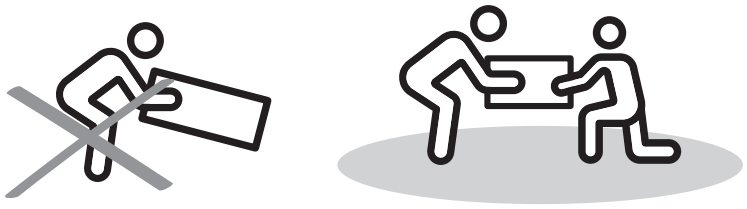

Teamwork

ALWAYS have at least two people to help with transporting and assembling the product to avoid potential injury and/or damage.

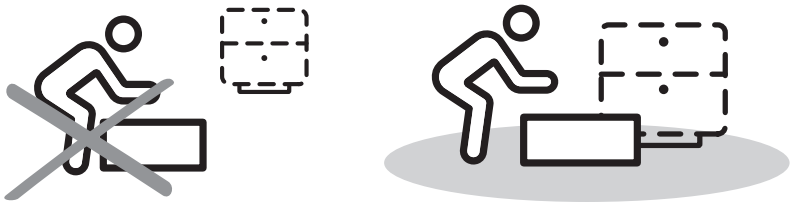

Suitable Location

Assembling near the area of the intended location is highly recommended.

Sufficient Space

Make sure you have enough space to move around during the assembly.

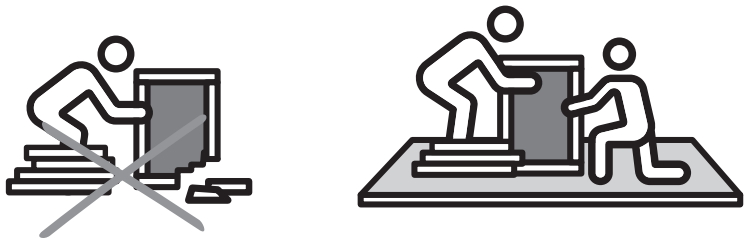

Avoid Scratches

Use cardboard, blankets or a carpeted area while assembling furniture to prevent scratches.

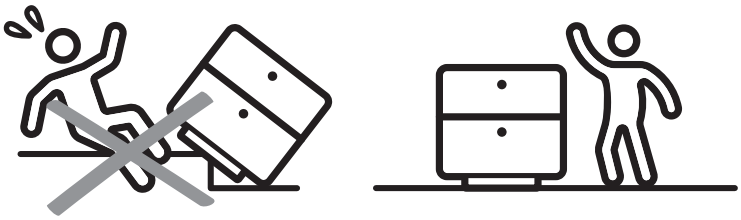

Flat Surface

Make sure the furniture rests on a flat and level surface with each leg evenly touching the floor.

ASSEMBLY AND CARE ADVICE

FAILURE TO FOLLOW THE GUIDELINES BELOW MAY RESULT IN INJURY AND/OR PROPERTY DAMAGE.

Position each part correctly and insert screws or bolts into their respective holes.

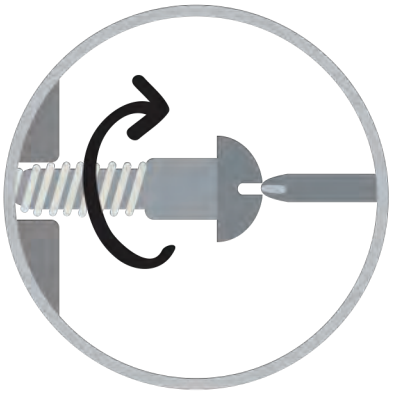

Turn clockwise to tighten and only tighten when step is completed or when instructed to do so.

Use the appropriate hand tools or power tools for assembly. Select steps, such as tightening screws and/or bolts, may require hand tools to avoid causing damage during assembly.

Save the instructions and store any supplied tools for later maintenance.

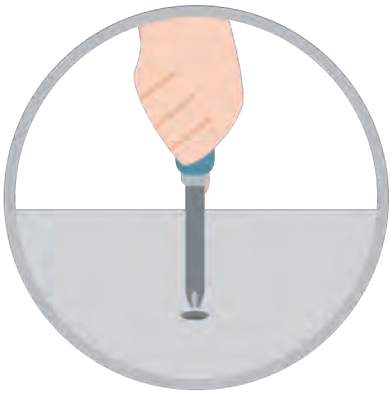

After two weeks, check and tighten any loose hardware and repeat again every six months thereafter.

IT IS THE USER'S RESPONSIBILITY TO MAINTAIN THE FURNITURE. THE HARDWARE MAY LOOSEN OVER TIME AND MAY CAUSE THE FURNITURE TO BE WOBBLY AND UNABLE TO SUPPORT ITS INTENDED WEIGHT CAPACITY. THIS MAY LEAD TO COLLAPSE AND MAY CAUSE SERIOUS INJURY.

TV STAND

FOA5789-TV

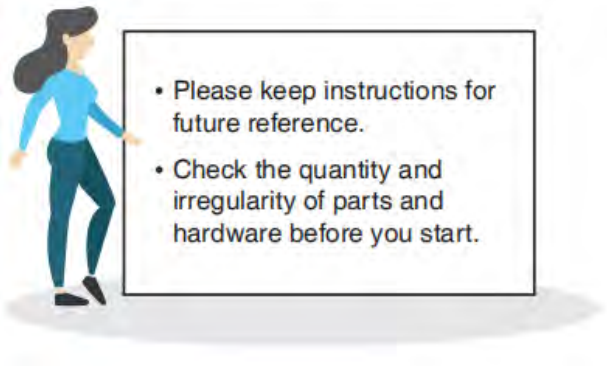

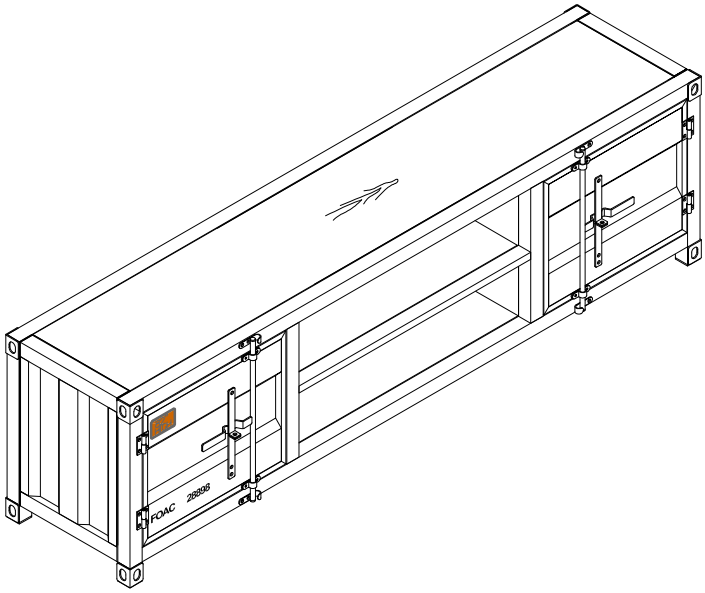

PARTS

#1 1pc

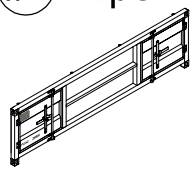

Front Frame

#2 1pc

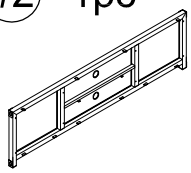

Back Frame

#3 1pc

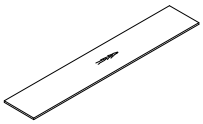

Upper Board

#4 2pcs

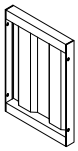

Side Panel

#5 2pcs

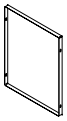

Side Board

#6 1pc

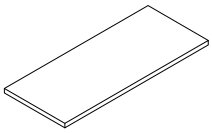

MIddle Board

#7 1pc

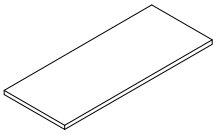

Bottom Board

#8 2pcs

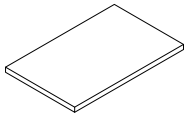

Side Bottom Board

HARDWARE

#A 8pcs

Bolt 3/16" x 3/8"

#B 8pcs

Bolt 1/4" x 5/8"

#C 8pcs

Screw M5x12

#D 1pc

Allen Wrench M4

ASSEMBLY INSTRUCTIONS

1

Exploded View

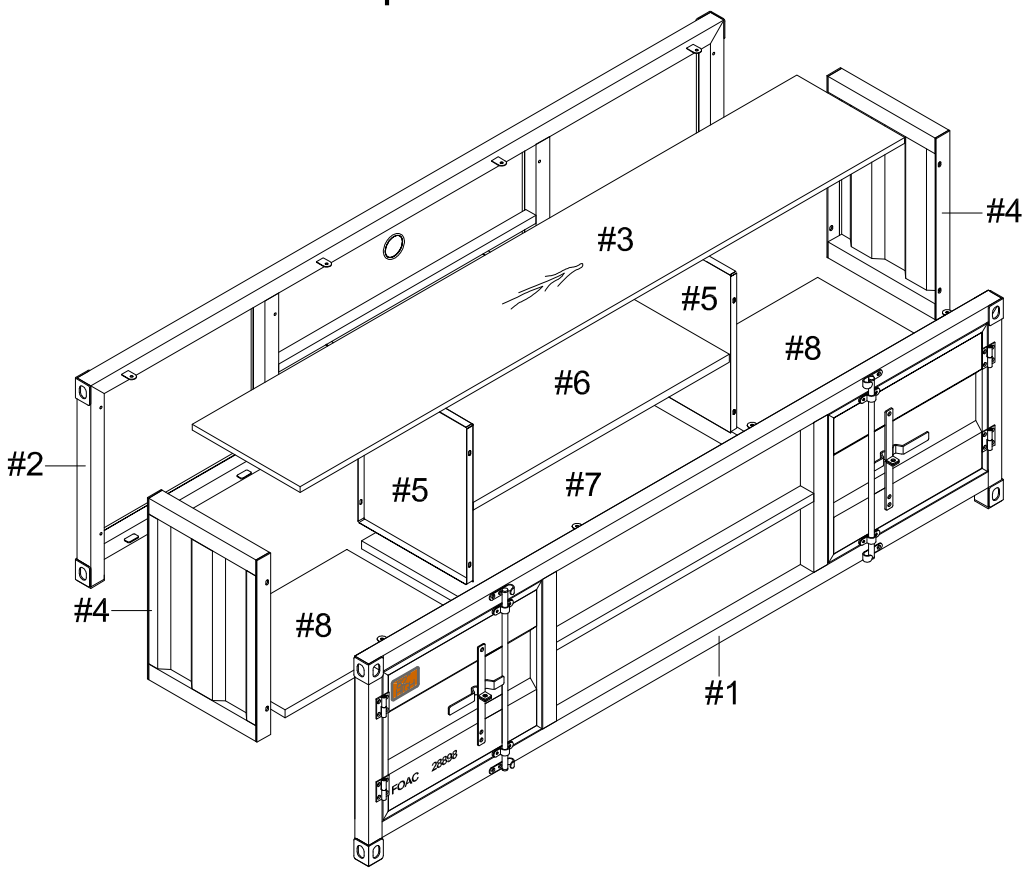

2

Part #1 x 1pc

Part #2 x 1pc

Part #4 x 2pcs

Hardware #B x 8pcs

Hardware #D x 1pc

Align frames (#1,2) to the side panels (#4), then secure by using bolts (#B).

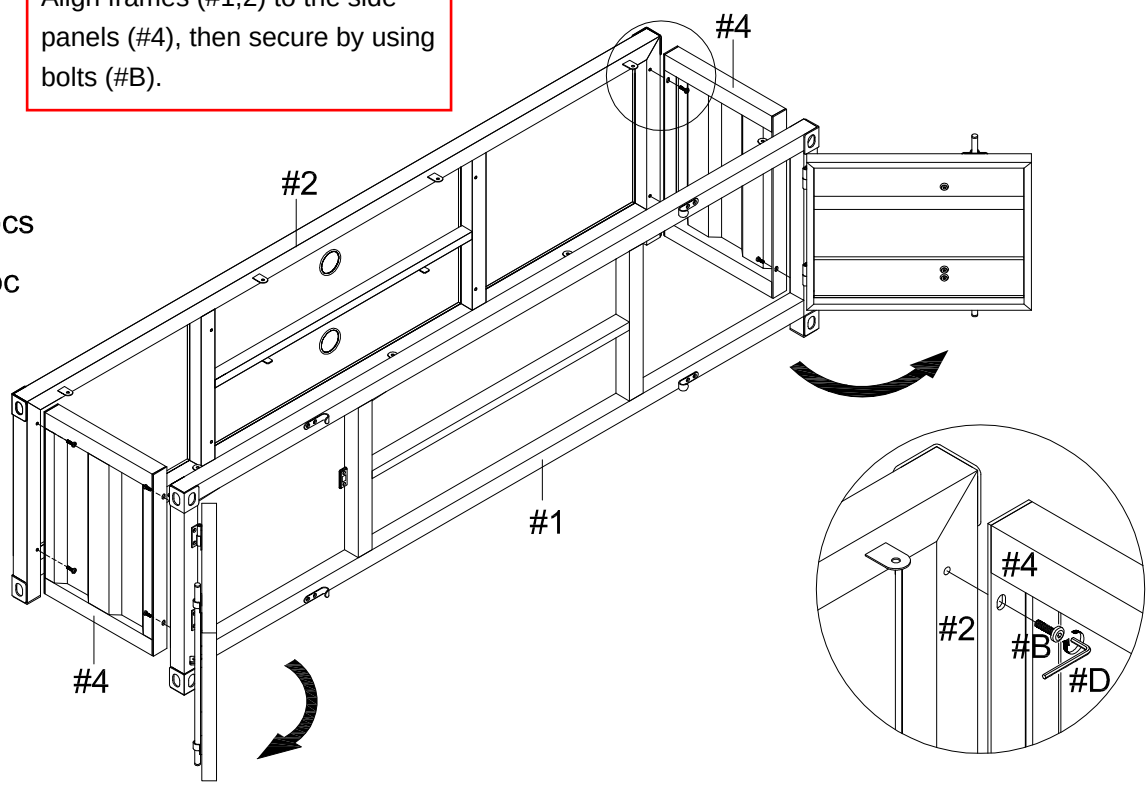

ASSEMBLY INSTRUCTIONS

3

Part #7 x 1pc

Part #8 x 2pcs

Place bottom boards (#7,8) to the bottom of the frame.

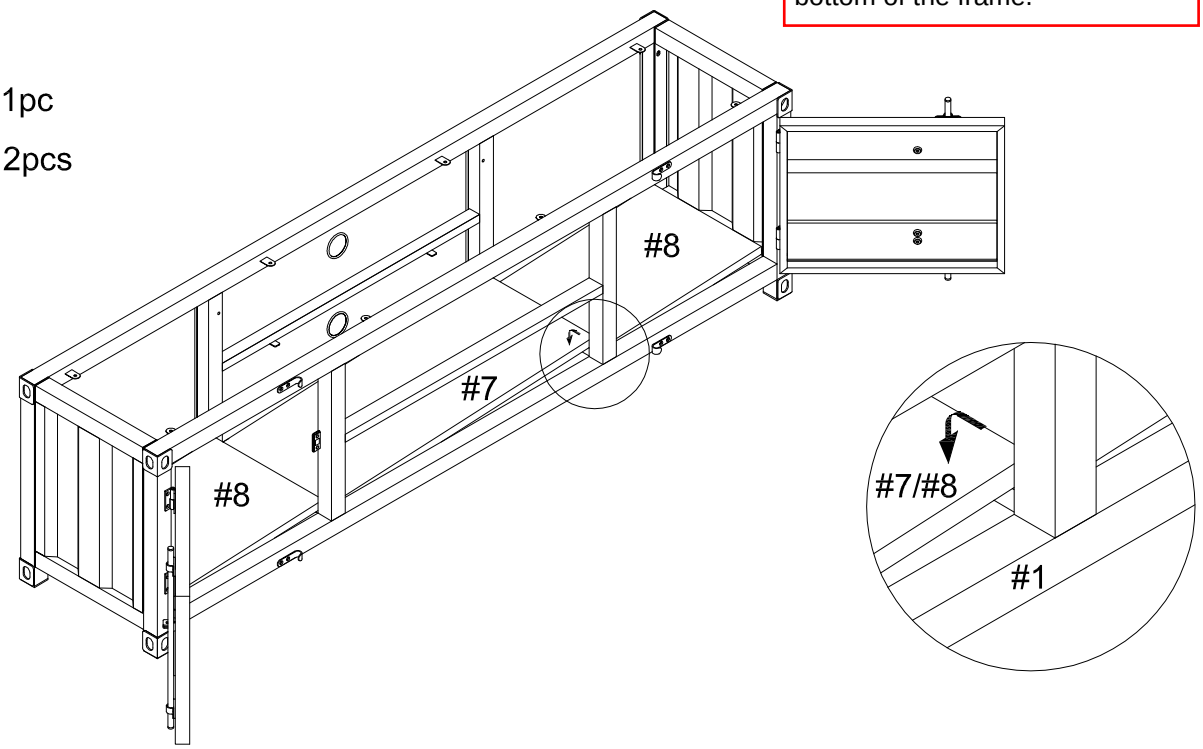

4

Part #5 x 2pcs

Hardware #A x 8pcs

Align side boards (#5) to the inner frame of the unit, then secure by using bolts (#A).

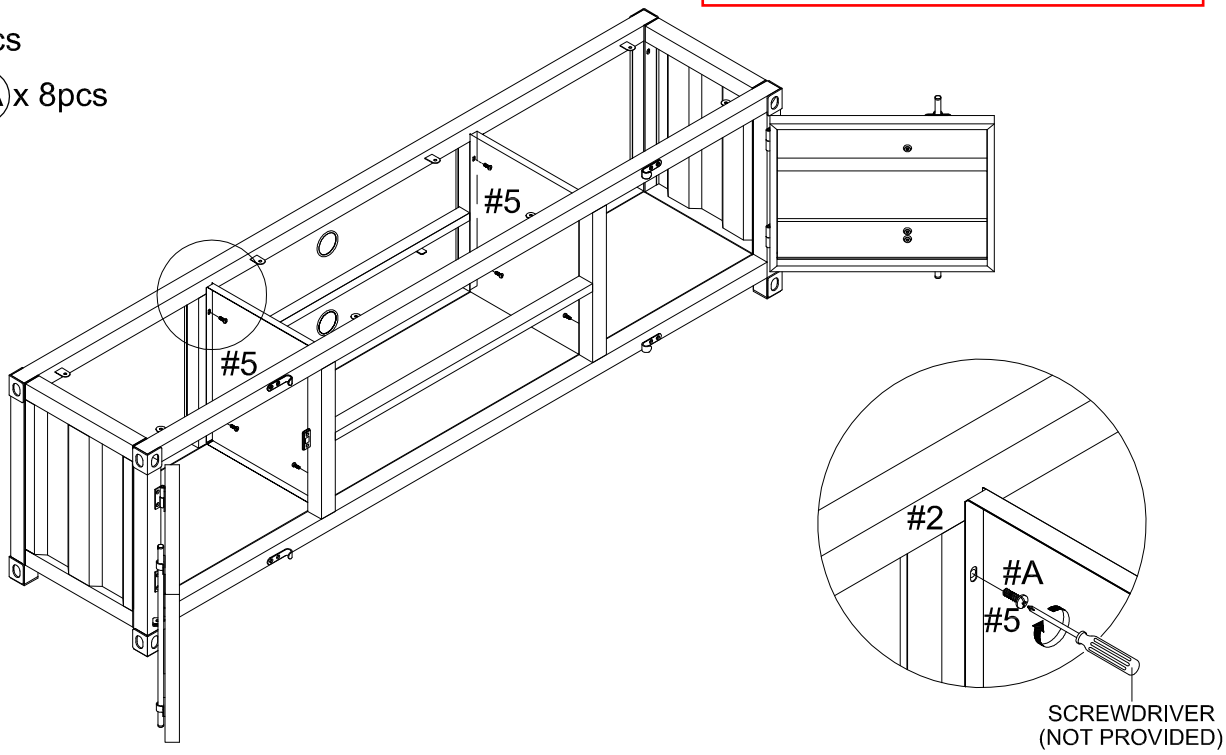

ASSEMBLY INSTRUCTIONS

Align upper board (#3) to the top of the frame, then secure by using screws (#C). There may not be pre-drilled holes.

5

Part #3 x 1pc

Hardware #C x 8pcs

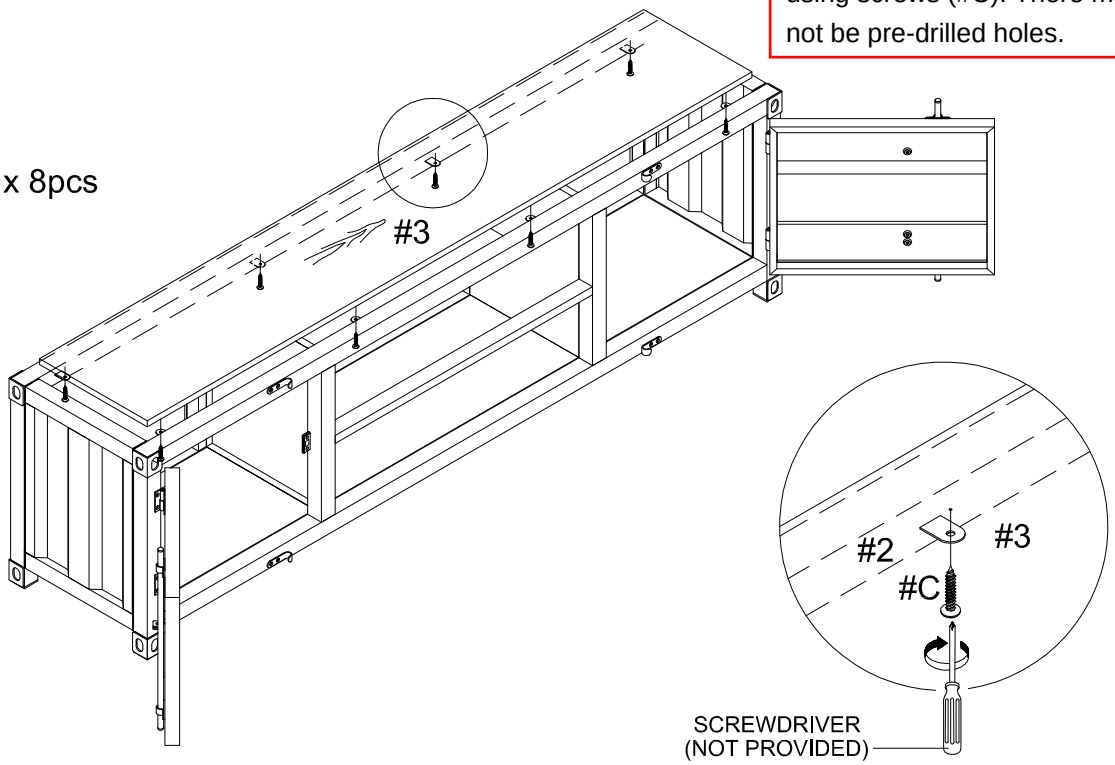

Align middle board (#6) to the middle shelving of the unit.

6

Part #6 x 1pc

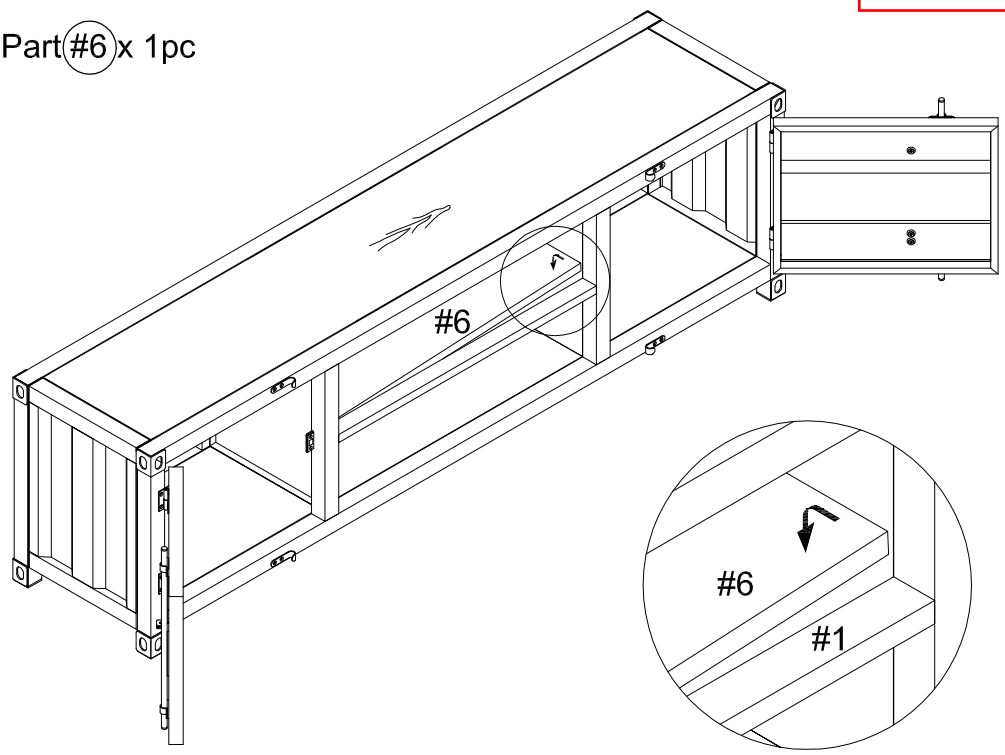

ASSEMBLY COMPLETED

Please ensure the furniture rests on an even and flat surface. If the product wobbles or feels loose, double-check all bolts and/or screws are properly tightened and secured.

Keep this handy!

Please retain this instruction manual and any order-related information for future reference.

Lift, don't drag!

To avoid damage to product please always LIFT the product when transporting of adjusting the placement.