SOU330X1

76CM (30”) "Classic" Electric Multifunction
Oven Stainless Steel
EAN13: 8017709204501

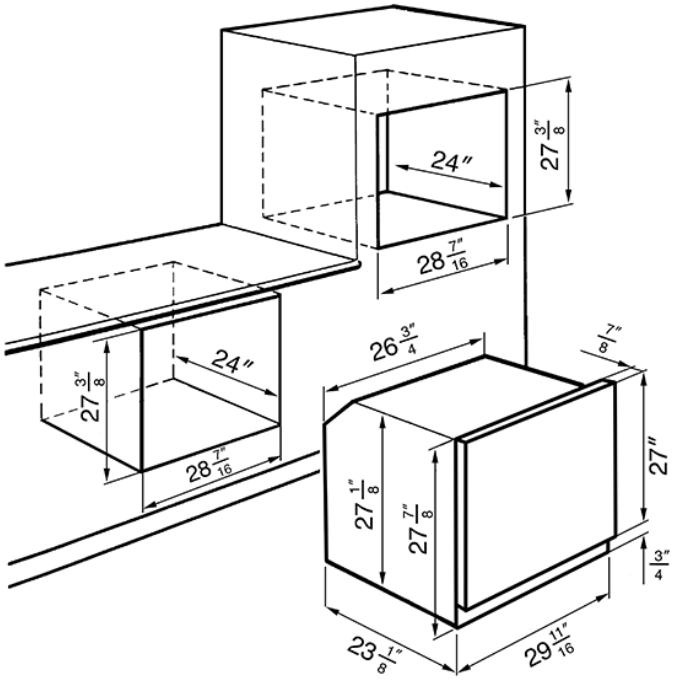

• **Classic design** • Multifunction oven with 10 cooking modes (including Warming and Dehydrate) + self cleaning cycle • Finger-print proof stainless steel • Ergonomic control knobs • Touch control panel to access secondary menu • Digital display • True European Double Convection • Fast Preheat Cycle (8 to 12 minutes) • Min temp 86°F • Max temp 554°F • Automated oven switch-off when door is open • Self cleaning • Sabbath mode • Child Safety locks • 6 Rack positions • 1 telescopic guide • Oven capacity: 4.34 cu.ft. • Interior dimensions: W 24” x H 16 1/8” x 16 5/16” • Concealed bake element • Broil element 3.5kW • Convection element with 1.3Kw per fan • Voltage rating: 240/208V – 60Hz • Connected load (nominal power): Amps @ 240/208V: 16.9/17.5 Amps • Power supply location: center top • **Accessories Included:** • 1 Grid insert for tray • 2 Grid top • 1 Telescopic Guide • 1 Enameled Tray • 1 Meat probe •

Functions

Main Oven