BROAN®

SPECIFICATION SHEET

F40000 SERIES TWO-SPEED 4-WAY CONVERTIBLE RANGE HOOD

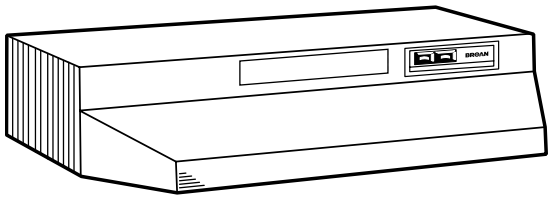

Constructed with quality and good looks, the F40000 is superior to the competition whether ducted vertically, horizontally, or non-ducted.

FEATURES

- Max. Blower CFM†: 230
- 120 V, 2850 RPM
- Two speed fan control
- Polymeric blade and light lens (accepts up to 75 W bulb)
- Washable aluminum filter
- Converts to non-ducted by removing cover plate from front of hood and installing the non-ducted filter (purchase separately)
- Mitered sides and hemmed bottom for safety and good looks
- 3¼" x 10" damper/duct connector included
- 7" round duct adapter plate included. 7" round damper purchase separately.
- Available in 24", 30", 36" and 42" widths
- Contemporary styling in White, Almond, Biscuit, Black, Stainless Steel (all widths), and Black Stainless Steel (30" width only)

HVI-2100 CERTIFIED RATINGS comply with new testing technologies and procedures prescribed by the Home Ventilating Institute, for off-the-shelf products, as they are available to consumers. Product performance is rated at 0.1 in. static pressure, based on tests conducted in a state-of-the-art test laboratory. Sones are a measure of humanly-perceived loudness, based on laboratory measurements.

† Max. blower CFM indicates the performance of the hood blower in open air.

TYPICAL SPECIFICATION

Range hood shall be Broan Model F40000.
Unit shall be convertible between ducted using a washable aluminum filter (included) and non-ducted (purchase non-ducted filter separately).
Motor to be permanently lubricated. RPM not to exceed 2850.
Unit shall have a two-speed fan switch with separate light switch.
Sides shall be mitered and bottom edge hemmed - with no sharp edges.
Air delivery shall be no less than 160 CFM and sound levels no greater than 7.5 Sones (3¼" x 10" horizontal), 160 CFM at 7.0 Sones (vertical discharge) or 190 CFM at 6.5 Sones (7" round discharge). All air and sound ratings shall be certified by HVI. Unit shall be U.L. listed.

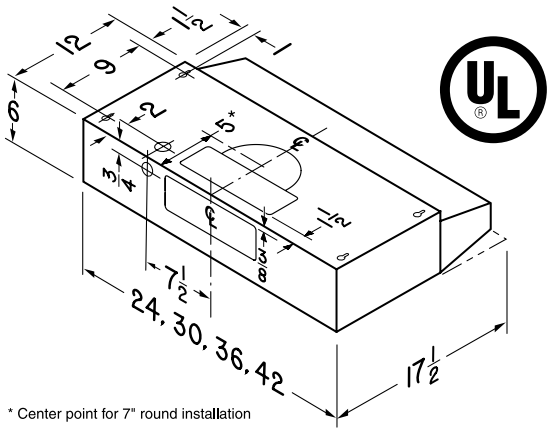

* Center point for 7" round installation

HVI PERFORMANCE

Duct Orientation	Size	Damper	Sones		CFM	
			Normal	High	Normal	High 0.1 in. w.g.
Vertical - Rectangular	3¼ in. x 10 in.	Included	4.0	7.5	110	160
Horizontal - Rectangular	3¼ in. x 10 in.	Included	4.5	7.0	100	160
Vertical - Round	7 in.	Sold separately	3.5	6.5	140	190

Can be used to comply with LEED requirements.

Broan-NuTone LLC, 926 West State Street, Hartford, Wisconsin, USA 53027 broan-nutone.com 800-558-1711

REFERENCE	QTY.	REMARKS	Project
			Location
			Architect
			Engineer
			Contractor
			Submitted by Date