UNDER CABINET RANGE HOOD SPECIFICATIONS

PRH9-348

Halogen lights. WL-1 warming lights are available on selected models.

Dimensional Information

Width	48.0
Depth	21.0
Height	9.0
CFM @ 0.0" SP	900.0
Sones	6.3
Amps	5.9
# Lights	3.0

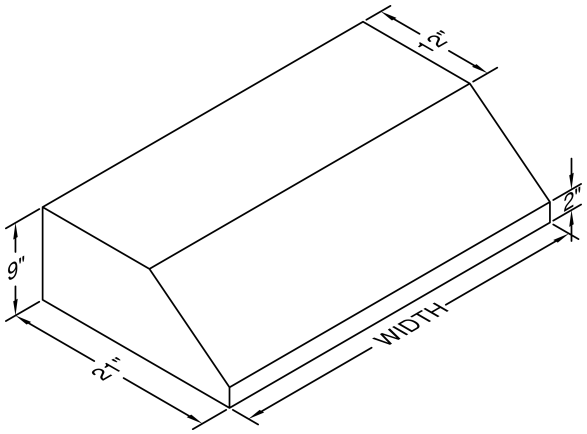

Connection Diagram

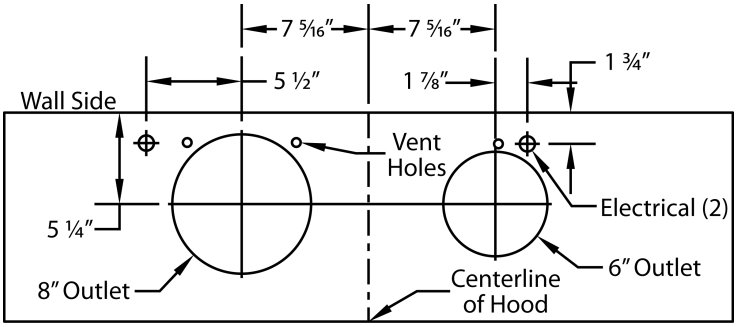

900 CFM B200 Dual B100 Single Blower (Top View)

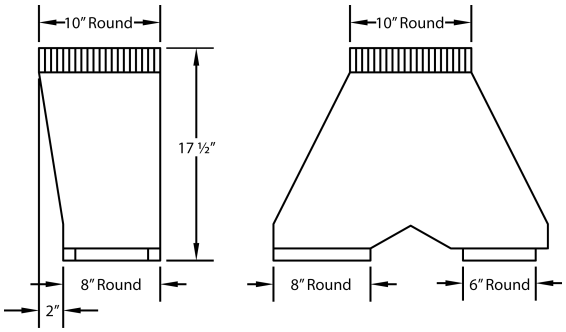

VP562 Transition (Optional) For B300 (B200 Dual Blower B100 Single Blower)

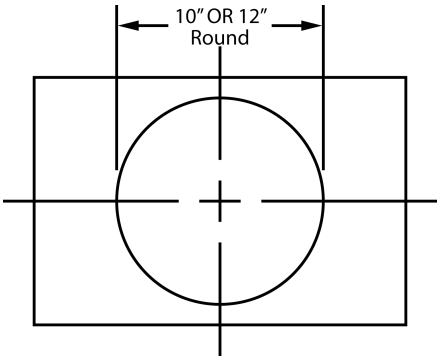

VP562 transition centers outlet over top of hood.

Recommended Mounting Height*

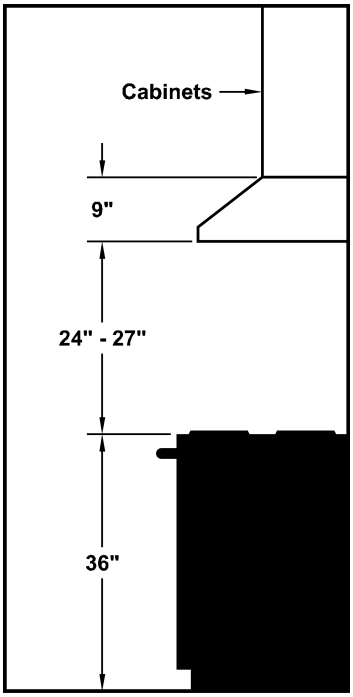

***Exceeding recommended mounting height may compromise performance.**

Electrical/Mechanical Specifications For Blower Unit

Model	Volts	Amps*	Hz	RPM	CFM SP@0.0"	Equivalent CFM	CFM SP@0.1"	CFM SP@0.2"	CFM SP@0.3"	Minimum Round Duct Size	Sones#
B200 Dual B100 Single	115.0	4.4	60.0	1550.0	900.0	1350.0	804.0	725.0	655.0	10" (79 sq. in.)	6.3

+ Add 2.5 amps for each warming light. This model is equipped with halogen lighting: (2 lights: 30" - 41", 3 lights: 42" - 48").

$ Because the Magic Lung® blower uses centrifugal filtration rather than conventional baffle or mesh filters, the Magic Lung® blower can handle cooking equipment with higher cubic feet per minute (CFM) requirements and can deliver equivalent CFM much more efficiently than other filtration systems. When comparing the Magic Lung® with other blower units made by other manufacturers, use the "Equivalent CFM".

Ratings in accordance with the Standard Test Code by the Energy Systems Laboratory of the Texas Engineering Experiment Station.

SPECIFICATIONS SUBJECT TO CHANGE WITHOUT NOTICE