24" SIGNATURE SERIES
Adara Beverage Dispenser

c UL us

eco friendly
R600a Refrigerant

ENERGY STAR

6 YEAR WARRANTY

JOB	
AREA	
ITEM NO.	
MODEL NO.	

Solid Door Model

Available with 1 or 2 faucets (2 faucet shown)

650SS Forward Sealing Flow Control Beer Faucet

MODELS	DESCRIPTION
HP24TS-4-1L/R-1A	Indoor Signature Series Adara Beverage Dispenser Solid Stainless Steel Door 1 Faucet
HP24TS-4-2L/R-1A	Indoor Signature Series Adara Beverage Dispenser Solid Panel Ready Door 1 Faucet
HP24TS-4-1L/R-2A	Indoor Signature Series Adara Beverage Dispenser Solid Stainless Steel Door 2 Faucets
HP24TS-4-2L/R-2A	Indoor Signature Series Adara Beverage Dispenser Solid Panel Ready Door 2 Faucets

KEY PRODUCT FEATURES AND BENEFITS

- 1000 BTU/hr capacity delivers industry's most energy efficient cool down; indoors or outdoors
- Up to 70% faster cooling speeds than leading competitor
- Variable speed compressor minimizes sound; up to 30% quieter than competitors
- Commercial-grade all stainless steel interior and exterior provide superior durability and easy cleaning

Quick Features:

- Forced air refrigeration technology ensures consistent temperature throughout entire keg, maintaining flavor better than other brands
- Industry's best full 6 year warranty for owner ease of mind
- Available with stainless steel or panel ready doors to match your design style
- Audible door alarm warns user if door is held open
- White LED task lighting
- R600a Natural Refrigerant offers maximum energy efficiency with zero ozone depletion potential
- Accommodates two (2) 1/6 barrels or one (1) 1/4 slim or standard barrel

One 1/4 barrel (standard or slim)

Two 1/6 barrel

Form No. Z2697
Rev 09.27.2021

24" SIGNATURE SERIES
Adara Beverage Dispenser

MODEL NUMBERS		HP24TS
MODEL DESCRIPTION		24" Indoor Beverage Dispenser - Adara Tower
ATTRIBUTES		
Perlick Anti-Condensation System		NO
Energy Star Certified		YES
OVERALL DIMENSIONS	**Width - in. (mm)**	23-7/8" (606 mm.)
	Depth - in. (mm)	24" (610 mm.)
	Height - in. (mm)	34-1/4" (870 mm.)
OPENING DIMENSIONS	**Width - in. (mm)**	24" (610 mm.)
	Depth - in. (mm)	24-7/8" (632 mm.)
	Height - in. (mm)	34-1/2" (876 mm.)
INTERNAL VOLUME Net. Cu. Ft.		5.2 cu. ft.
SHIPPING WEIGHT Lbs. (kg.)		222 lbs (100.7 kg.)
ELECTRICAL SPECIFICATIONS	**Electrical Supply**	115 VAC/60 Hz/1 Ph
	Running Load Amps	2.2 amps
	Electrical Connection	Cord connected
	Cord Plug Type	NEMA 3 Prong 5-15P
	Cord Length	6'
	Defrost Initiation	Automatic
	Defrost Type	Off cycle
	Thermostat	Digital
	Lighting Type	LED
REFRIGERATION SPECIFICATIONS	**Refrigerant**	R600a (50g)
	Expansion Device	Capillary Tube
	Temperature Settings F°(C°)	33° (0.5°) - 48° (8.8°) **Factory Set Point** 36° (2.2°)
	Heat Rejection (at 75°F)	450 BTU/hr
	Pull Down Capacity	1000 BTU/hr
	Front Vented	Yes
PLUMBING		None Required

ACCESSORIES

MODEL NOS.	DESCRIPTION
(L)	Factory Installed Lock
66736	Caster Kit for HP24/HC24/HA24 models
63797	Beer Dispenser Cleaning Kit
40030S	Keg Coupler, Lo-Boy "S" Series
67141-1	Perlick Faucet Handle
BLC4/32	Beer Dispenser Sanitizer (4 oz. or 32 oz.)

Perlick accessories are available for purchase through an authorized Perlick dealer. For a full list of accessories and to find a dealer near you, visit **perlick.com.**

Form No. Z2697
Rev 09.27.2021

Perlick®

24" SIGNATURE SERIES
Adara Beverage Dispenser

CUSTOMER MODEL NUMBER	REGULATORY MODEL NUMBER	Hinge Side	Lock
HP24TS-4-1L-1A	**HP24TS4C-E0-SLF0T**	Left	No
HP24TS-4-1R-1A	**HP24TS4C-E0-SRF0T**	Right	No
HP24TS-4-2L-1A	**HP24TS4C-E0-PL00T**	Left	No
HP24TS-4-2R-1A	**HP24TS4C-E0-PR00T**	Right	No
HP24TS-4-1L-2A	**HP24TS4C-F0-SLF0T**	Left	No
HP24TS-4-1R-2A	**HP24TS4C-F0-SRF0T**	Right	No
HP24TS-4-2L-2A	**HP24TS4C-F0-PL00T**	Left	No
HP24TS-4-2R-2A	**HP24TS4C-F0-PR00T**	Right	No
HP24TS-4-1LL-1A	**HP24TS4C-E0-SLFLT**	Left	Yes
HP24TS-4-1RL-1A	**HP24TS4C-E0-SRFLT**	Right	Yes
HP24TS-4-2LL-1A	**HP24TS4C-E0-PL0LT**	Left	Yes
HP24TS-4-2RL-1A	**HP24TS4C-E0-PR0LT**	Right	Yes
HP24TS-4-1LL-2A	**HP24TS4C-F0-SLFLT**	Left	Yes
HP24TS-4-1RL-2A	**HP24TS4C-F0-SRFLT**	Right	Yes
HP24TS-4-2LL-2A	**HP24TS4C-F0-PL0LT**	Left	Yes
HP24TS-4-2RL-2A	**HP24TS4C-F0-PR0LT**	Right	Yes

PERLICK CORPORATION 8300 W. Good Hope Rd., Milwaukee, WI 53223 • (800) 558-5592 • perlick.com

24" SIGNATURE SERIES
Adara Beverage Dispenser

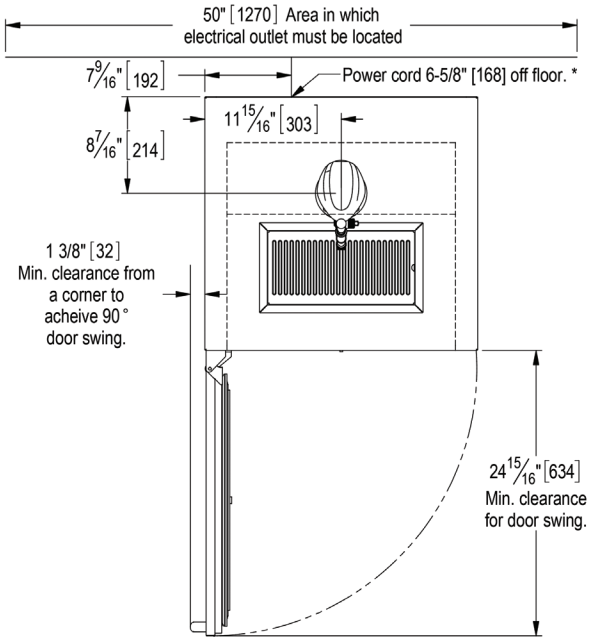

* - Leg levelers can add 3/4" [19] to these dimensions when fully extended.

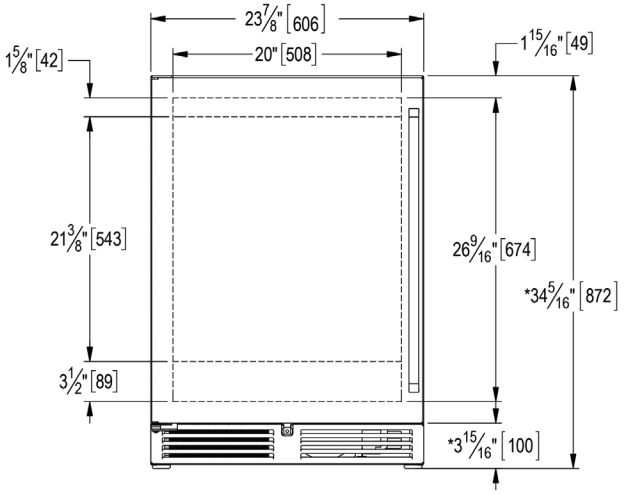

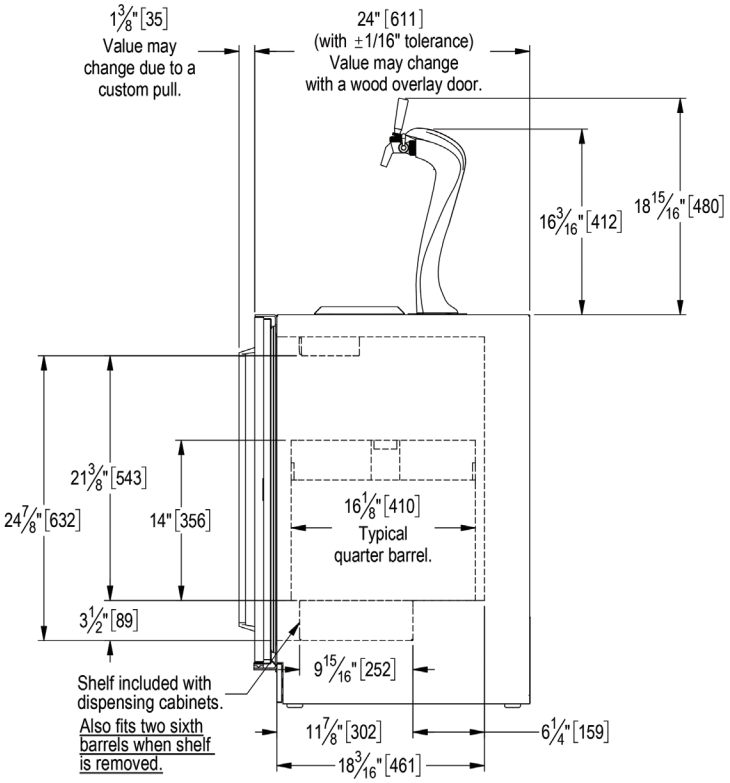

Form No. Z2697
Rev 09.27.2021