DID2

Integrator Recessed Downlight

Retrofit
4", 5", 6" Aperture

Project:	Type:
Product Code:	Date:

Spec Sheet V-05.01.21

ENGINEERED FOR CUSTOM INTEGRATORS

HIGH PERFORMANCE Produces up to 1250 lumens of 93+ CRI lighting for natural, true-to-life colors without sacrificing stellar efficiency

PRECISE CONTROL Field-changeable light distribution ranging from 15° to 90°+

DIM TO DARK Smooth, flicker-free dimming down to 1% with centralized or local control

FAST INSTALL Integrated driver, plug-and-play connection, and Twist & Lock Trims

MODULAR DESIGN Flexibility during and after installation with interchangeable modules, optics and trims

OPTICAL

Delivered Lumens (Power)

750 lm (9.5W), 1000 lm (12.5W), 1250 lm (14.3W)

Color Quality

93+ CRI, 2-step SDCM

Color Temperature

2700K 3000K 3500K
4000K Warm Dim (3000–1800K)

Beam Spread

Narrow Spot (15°)
General (90°+)
Spot (25°)
Linear (40° x 20°)
Flood (40°)
Soft Focus
Wide Flood (60°)

Specialty Lens

Hexcell Louver

PHYSICAL

Application

Retrofit

Aperture

4", 5", 6"

Ceiling Thickness

½" up to 1¾"

TRIMS

Available Trims

4": Beveled, Baffle, Wall Wash; 5": Beveled, Baffle, Wall Wash; 6": Beveled, Baffle, Wall Wash

Trim Finish

White, Black, Silver, Custom

ELECTRICAL & CONTROLS

Input Voltage

120/277V

1% Dimming

TRIAC/ELV

RATINGS

Module Ratings

UL Listed for Wet Location

DMF LIGHTING 1118 E. 223rd St. Carson, CA 90745 323.934.7779 info@dmflighting.com dmflighting.com

© 2021 DMF Lighting. All Rights Reserved. Specifications subject to change without notice. See website for U.S. and international patent information.

PRODUCT BUILDER

DID2 MODULE

PRODUCT CODE		LUMENS		CRI		CCT		BEAM SPREAD		SPECIALTY LENS		DIMMING	
DID2M	Module	07	750 lm	9	93+ CRI	27	2700K	GA	General Ambient (90°+)	[Blank]	None	T	Integrated TRIAC/ELV
		10	1000 lm			30	3000K	NS	Narrow Spot (15°) [2]	H	Hexcell [3]		
		12	1250 lm			35	3500K	SP	Spot (25°)				
						40	4000K	FL	Flood (40°)				
						3W	Warm Dim [1]	WF	Wide Flood (60°)				
								LS	Linear Spread (40° x 20°)				
								SF	Soft Focus				

RETROFIT TRIM

PRODUCT CODE		SHAPE		APERTURE		STYLE		FINISH		OPTION	
DRD2T	Trim	R	Round	4	4" Aperture	S	Beveled	WH	White	[Blank]	None
				5	5" Aperture	B	Baffle [4]	BK	Black	DF	Dead Front [4,5]
				6	6" Aperture	W	Wall Wash [4]	SW	Silver, White Flange		
								CC	Custom Color		

ADAPTER (OPTIONAL) [6]

PRODUCT CODE	
DRD2X-QCM-ED	Edison Adapter
DRD2X-QCM-GU	GU-24 Adapter
DRD2X-QCM-M	PowerPlug Luminaire Disconnect Male Adapter

[1] Only available in 1000 lm
[2] Not available in Warm Dim CCT
[3] Not available for General Ambient or Soft Focus beam spread, Wall Wash trims
[4] Only available in White finish
[5] Only available in Round shape, 4" aperture, Beveled style
[6] Module features PowerPlug Luminaire Disconnect Female Connector and ships with PowerPlug Male Connector to Electrical Leads Adapter

DMF LIGHTING 1118 E. 223rd St. Carson, CA 90745 323.934.7779 info@dmflighting.com dmflighting.com

© 2021 DMF Lighting. All Rights Reserved. Specifications subject to change without notice. See website for U.S. and international patent information.

PRODUCT BUILDER

OPTICS ACCESSORIES

PRODUCT CODE	
DID2X-GA	Conversion Kit: DID2 Module to General Abient (90°+)
DID2X-NS	Narrow Spot (15°)
DID2X-SP	Spot (25°)
DID2X-FL	Flood (40°)
DID2X-WF	Wide Flood (60°)
DID2X-LS	Linear Spread (40° x 20°)
DID2X-SF	Soft Focus
DID2X-OP	Optics Kit: Narrow Spot (15°), Spot (25°), Flood (40°), Wide Flood (60°), Linear Spread (40° x 20°), Soft Focus
DID2X-NSH	Narrow Spot (15°), Hex Louver
DID2X-SPH	Spot (25°), Hex Louver
DID2X-FLH	Flood (40°), Hex Louver
DID2X-WFH	Wide Flood (60°), Hex Louver
DID2X-LSH	Linear Spread (40° x 20°), Hex Louver

DMF LIGHTING 1118 E. 223rd St. Carson, CA 90745 323.934.7779 info@dmflighting.com dmflighting.com

© 2021 DMF Lighting. All Rights Reserved. Specifications subject to change without notice. See website for U.S. and international patent information.

MODULE

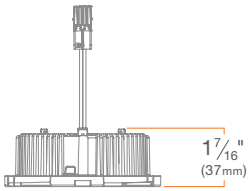

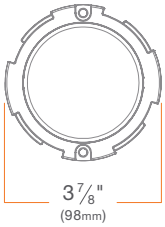

DID2

Integrator Module

DID2M

SUMMARY

LED CHIP: Cree

DELIVERED LUMENS (w Trim): 750 lm (9.5W), 1000 lm (12.5W), 1250 lm (14.3W)

EFFICACY: 79 lm/W, 80 lm/W, 87 lm/W

COLOR QUALITY: 93+ CRI, 2-step SDCM

CCT: 2700K, 3000K, 3500K, 4000K

BEAM SPREAD: General Ambient (90°+), Narrow Spot (15°), Spot (25°), Flood (40°), Wide Flood (60°), Linear Spread (40° x 20°), Soft Focus

SPECIALTY LENS: Hex Louver

CONNECTOR: PowerPlug® Luminaire Disconnect Model 182

INPUT VOLTAGE: 120/277V, 50/60Hz

DIMMING: Down to less than 1% for TRIAC/ELV at 120V

MAX INPUT CURRENT (120V): 0.090 amps, 0.107 amps

MAX INPUT CURRENT (277V): 0.042 amps, 0.050 amps

POWER FACTOR: Greater than 0.9

TOTAL HARMONIC DISTORTION: Less than 20%

AMBIENT OPERATING TEMPERATURE: -20°C to 40°C

PHOTOMETRIC TESTING: Tested in accordance to IESNA LM-79-2008

LISTINGS: ENERGY STAR® qualified*, California Title 24 2016 JA8 compliant, UL Listed for Wet Location (flanged trims only), cULus Listed, Declare

LIFETIME: 50,000 hours at 70% lumen maintenance

WARRANTY: 10 year limited warranty

WARM DIM OPTION

LED: Bridgelux LED, **DELIVERED LUMENS (w Trim):** 1000 lm (12.0W), **EFFICACY:** 83 lm/W, **CCT RANGE:** 3000K - 1800K, **MAX INPUT CURRENT (120V):** 0.11 amps, **MAX INPUT CURRENT (277V):** 0.047 amps

**Excludes Pinhole and Wall Wash Trims*

© 2021 DMF Lighting. All Rights Reserved. Specifications subject to change without notice. See website for U.S. and international patent information.

TRIM

Classic Trims

4", 5", 6" Aperture

DRD2T

SUMMARY

CONSTRUCTION: Die-cast aluminum

INSTALLATION: Twist & Lock

4" Round Trim

Beveled: **DRD2TR4SWH**

Baffle: **DRD2TR4BWH**

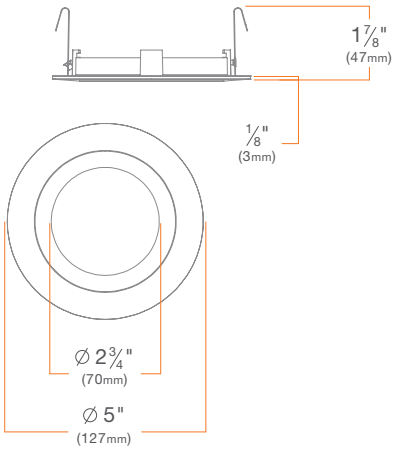

4" Wall Wash Trim

DRD2TR4WWH

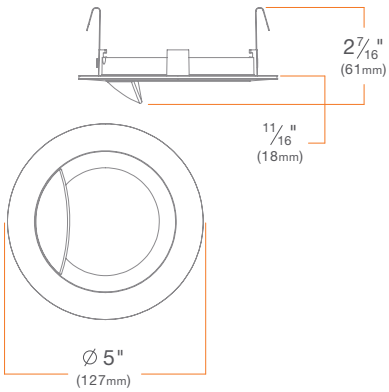

5" Round Trim

DRD2TR5SWH

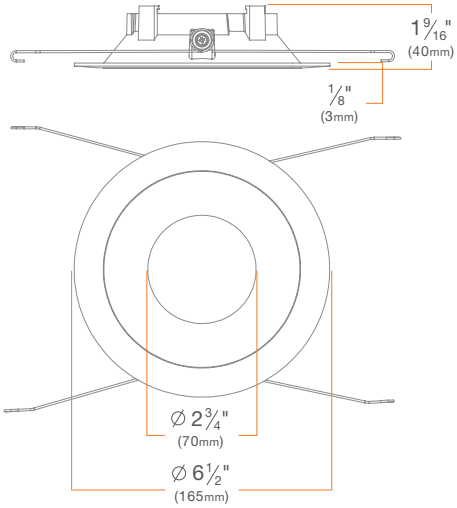

5" Wall Wash Trim

DRD2TR5WWH

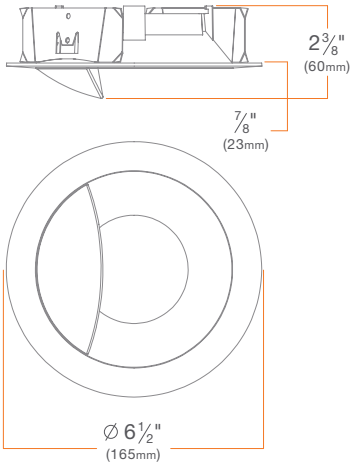

© 2021 DMF Lighting. All Rights Reserved. Specifications subject to change without notice. See website for U.S. and international patent information.

6" Round Trim

DRD2TR6SWH

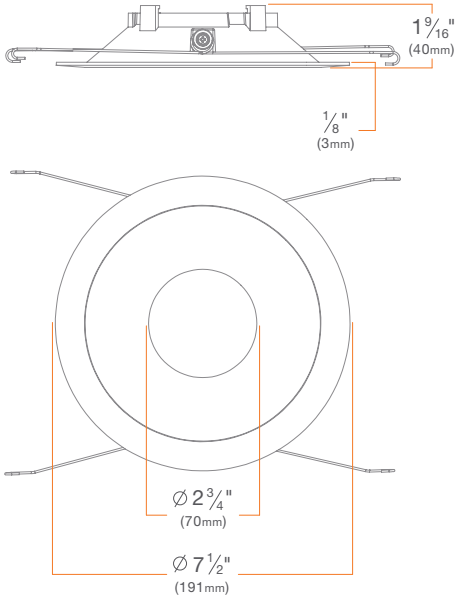

6" Wall Wash Trim

DRD2TR6WWH

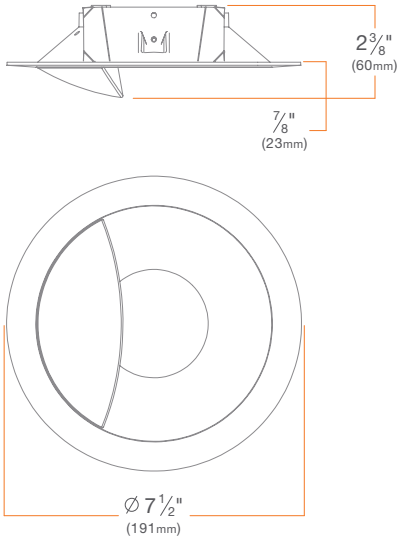

© 2021 DMF Lighting. All Rights Reserved. Specifications subject to change without notice. See website for U.S. and international patent information.

PHOTOMETRY

DID2 1000 lm, 3000K, Narrow Spot

DID2M10930NS

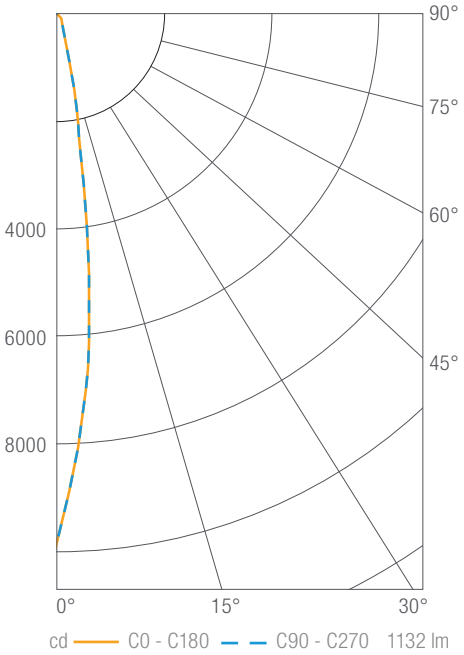

Luminous Intensity

Gamma	C 0°
0º	9823
5º	6600
10º	2335
15º	734
20º	357
25º	244
30º	195
35º	159
40º	116
45º	85
50º	61
55º	42
60º	28
65º	16
70º	7
75º	4
80º	2
85º	1
90º	0

Values in candela

Zonal Lumen Summary

Zone	Lumens	Luminaire %
0-30	906	80
0-40	1004	89
0-60	1110	98
0-90	1131	100
0-180	1132	100

Illuminance Chart

Distance from LED	Foot Candles	Diameter
3'	1091	0.7'
6'	273	1.5'
9'	121	2.2'
12'	68	2.9'

Beam Angle: 14°

DID2 1000 lm, 3000K, Spot

DID2M10930SP

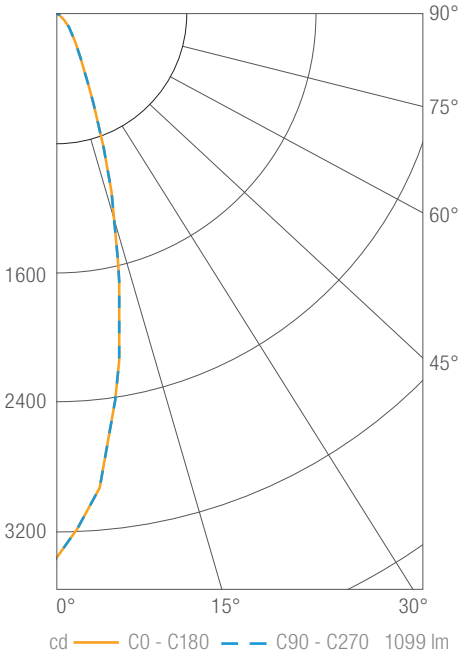

Luminous Intensity

Gamma	C 0°
0º	3366
5º	2967
10º	2203
15º	1391
20º	775
25º	419
30º	248
35º	167
40º	119
45º	87
50º	62
55º	43
60º	26
65º	15
70º	7
75º	4
80º	2
85º	1
90º	0

Values in candela

Zonal Lumen Summary

Zone	Lumens	Luminaire %
0-30	862	78
0-40	971	88
0-60	1078	98
0-90	1098	100
0-180	1099	100

Illuminance Chart

Distance from LED	Foot Candles	Diameter
3'	374	1.4'
6'	93	2.8'
9'	42	4.2'
12'	23	5.6'

Beam Angle: 26°

© 2021 DMF Lighting. All Rights Reserved. Specifications subject to change without notice. See website for U.S. and international patent information.

PHOTOMETRY

DID2 1000 lm, 3000K, Flood

DID2M10930FL

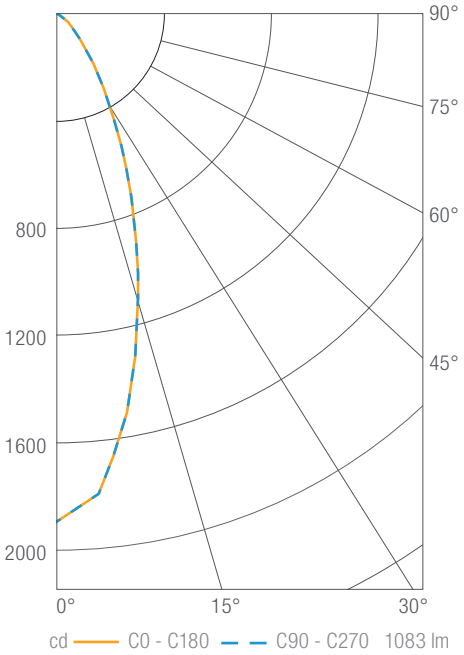

Luminous Intensity

Gamma	C 0°
0º	1890
5º	1792
10º	1503
15º	1161
20º	849
25º	589
30º	391
35º	256
40º	162
45º	107
50º	74
55º	51
60º	30
65º	18
70º	8
75º	5
80º	3
85º	1
90º	0

Values in candela

Zonal Lumen Summary

Zone	Lumens	Luminaire %
0-30	760	70
0-40	925	85
0-60	1058	98
0-90	1081	100
0-180	1083	100

Illuminance Chart

Distance from LED	Foot Candles	Diameter
3'	210	2.0'
6'	52	4.0'
9'	23	6.0'
12'	13	8.0'

Beam Angle: 37°

DID2 1000 lm, 3000K, Wide Flood

DID2M10930WF

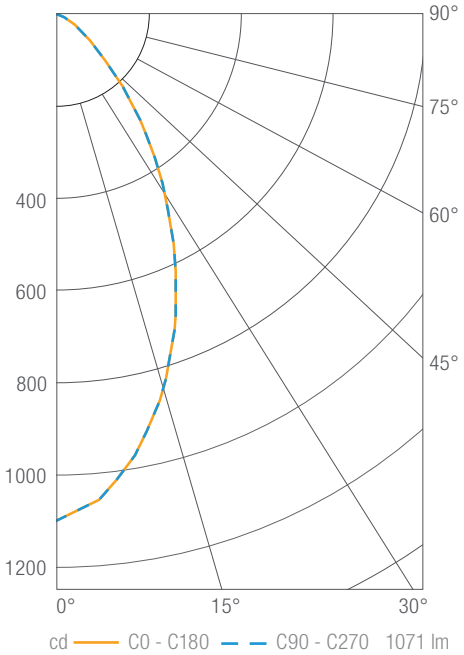

Luminous Intensity

Gamma	C 0°
0º	1100
5º	1058
10º	973
15º	866
20º	743
25º	609
30º	478
35º	361
40º	252
45º	161
50º	102
55º	68
60º	41
65º	24
70º	11
75º	6
80º	4
85º	2
90º	0

Values in candela

Zonal Lumen Summary

Zone	Lumens	Luminaire %
0-30	620	58
0-40	845	79
0-60	1037	97
0-90	1069	100
0-180	1071	100

Illuminance Chart

Distance from LED	Foot Candles	Diameter
3'	122	3.1'
6'	31	6.2'
9'	14	9.3'
12'	8	12.3'

Beam Angle: 55°

© 2021 DMF Lighting. All Rights Reserved. Specifications subject to change without notice. See website for U.S. and international patent information.

PHOTOMETRY

DID2 1000 lm, 3000K, General Ambient

DID2M10930GA

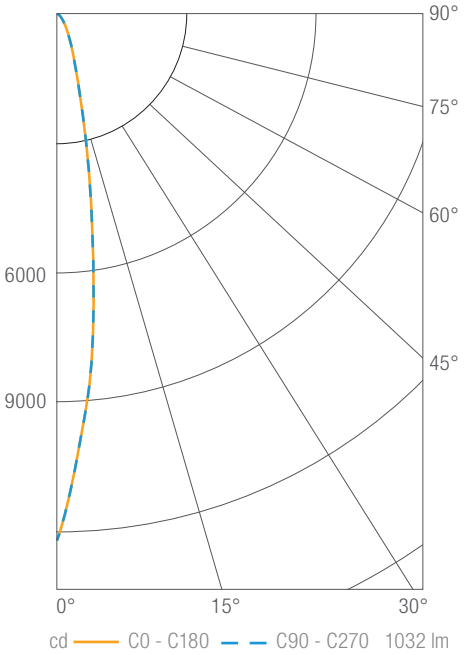

Luminous Intensity

Gamma	C 0°
0º	416
5º	415
10º	410
15º	403
20º	394
25º	382
30º	369
35º	351
40º	327
45º	291
50º	240
55º	162
60º	84
65º	54
70º	33
75º	21
80º	12
85º	6
90º	1

Values in candela

Zonal Lumen Summary

Zone	Lumens	Luminaire %
0-30	333	32
0-40	557	54
0-60	942	91
0-90	1024	99
0-180	1032	100

Illuminance Chart

Distance from LED	Foot Candles	Diameter
3'	46	7.8'
6'	12	15.5'
9'	5	23.3'
12'	3	31.1'

Beam Angle: 100°

DID2 1000 lm, 3000K, Soft Focus

DID2M10930SF

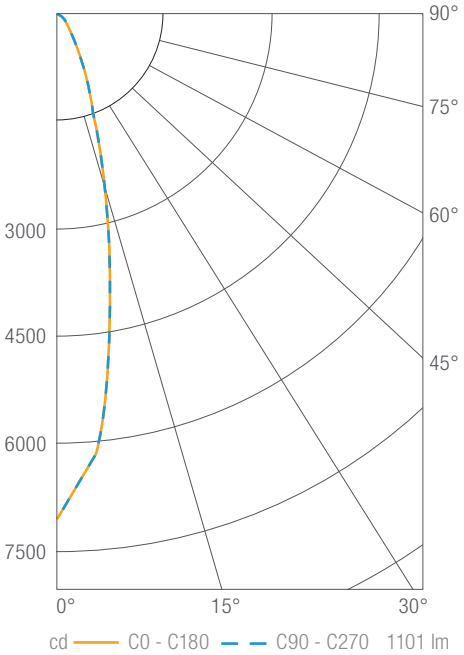

Luminous Intensity

Gamma	C 0°
0º	7280
5º	5603
10º	2489
15º	875
20º	381
25º	247
30º	194
35º	161
40º	122
45º	90
50º	64
55º	45
60º	28
65º	16
70º	7
75º	4
80º	2
85º	1
90º	0

Values in candela

Zonal Lumen Summary

Zone	Lumens	Luminaire %
0-30	868	79
0-40	968	88
0-60	1078	98
0-90	1100	100
0-180	1101	100

Illuminance Chart

Distance from LED	Foot Candles	Diameter
3'	809	0.9'
6'	202	1.7'
9'	90	2.6'
12'	51	3.4'

Beam Angle: 16°

© 2021 DMF Lighting. All Rights Reserved. Specifications subject to change without notice. See website for U.S. and international patent information.